FIDLOCK®

Catalogue 2020

FIDLOCK®

Fidlock - the new generation of fasteners

Fidlock was founded with a specific goal: revolutionizing even long-established concepts by developing easy-to-use and trend-setting magnetic-mechanical fasteners in an appealing design. Our innovative fasteners are based on the unique Fidlock concept and offer new dimensions of functionality, safety and fun. Users are convinced straight away by the great ease of use, ergonomic features, as well as the classy and robust processing of the components. In daily routines, Fidlock fasteners offer qualities which have never been achieved before: They close automatically and are suitable for easy, one-handed operation – even with gloves. This advantage is particularly appreciated during sporting activities, offering a spare hand to ensure the user's safety. The Fidlock concept combines great reliability with the simplest and pleasant method of opening and closing a fastener: a maximum level of comfort, convenience, security, function and fun.

Fidlock's current repertoire offers product developers and designers a large range of innovative, magnetic fasteners in eleven product families. Appropriate solutions for a wide range of application areas and individual design concepts are available. Considering the large selection of styles and materials, as well as individualization opportunities, product designers do not have to make any compromises when using Fidlock fasteners. They are not only based on a multiple award-winning and unique concept but also complement and refine our customer's products with convincing quality features. As a result, innovative product lines with additional value emerge. No matter whether Fidlock fasteners are applied on top-quality pieces of furniture, bags, backpacks, helmets or other sport and lifestyle branded articles – Users are thrilled by the design and the secure hold of the fastening concepts with single-handed operation.

Award-winning technology - the Fidlock concept

Our product portfolio is based on a one-of-a-kind, patented, magnetic-mechanical fastener technology: the Fidlock concept. It combines neodymium magnets with a snap mechanism. One important feature of our Fidlock fasteners is that the opening procedure differs from the closing procedure. When closing, the magnets are moved towards each other, due to the attractive force, and are automatically securely locked when they connect, thanks to the mechanical snap functionality. Depending on the product group or concept, Fidlock fasteners are easily opened by sliding laterally, tilting or rotating.

Thanks to the Fidlock concept, our innovative methods combine the advantages of a magnetic and a snap fastener in a way that has never been achieved before: strong magnets make them easy to close and secure and the mechanical engagement ensures a continuously high locking force.

The buckles and fasteners listed here are not suitable for safety related applications unless explicitly indicated in the field "note". If you are unsure whether the buckle you have chosen is suitable for your application, please do not hesitate to contact us either by e-mail: info@fidlock.com or by phone: +4951196159310.

User information: Please note it is possible for dirt (e.g. metal splinters) to get stuck to the buckles and thus hinder it from closing correctly. Please advise your customers that the buckle should be free from dirt in order to guarantee perfect functionality.

A handle that gets to grips - ergonomics and one-hand operation for safety and convenience

The MINI TURN product family is an enhanced development of the BIG TURN rotary fasteners – our first product following the Fidlock concept. In addition to the very compact and light design, the MINI TURN combines other convincing traits: Half a turn of the handle opens the fastener in no time and it closes automatically, enabling a one-handed use. The great variety of handles and materials offer product designers great flexibility in their composition. Depending on the intended use of the fastener on the product, the MINI TURN is ideal for shoulder bags, satchels, handbags and many other applications. Furthermore, the fastener covers are available in different colours and can feature individual branding. Possibilities are optional dying of the plastic and a logo sticker or anodisation and laser engraving of the aluminium. Even individual handles can be developed upon request. The MINI TURN products impress not only with their ease-of-use and convenience but also with their processing, making the assembly quick and easy.

Technical Data

Height, upper part	17,6 mm	Height lower part	14,4 mm
Hole circle, upper part	27,0 mm	Hole circle lower part	36,0 mm
Min. mat. thickness upper part	1,0 mm	Max. mat. thickness upper part	2,6 mm
Min. mat. thickness lower part	1,0 mm	Max. mat. thickness lower part	2,6 mm
Fitting, threaded ring	Face Spanner		

The MINI TURN thread top sleeve is also available for thicker materials (2,5 - 5 mm).

MINI TURN thread - processing with screw collar

The simple processing makes the MINI TURN an ideal solution for a wide variety of application areas. The fastener is fitted using stable thread collars for the upper part (male) and the lower part (female). Even with simple tools, the execution can be performed reliably.

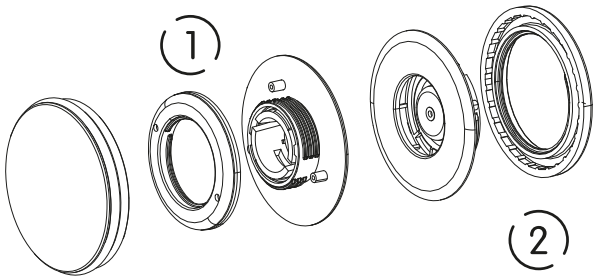

Article Number: 02010

MINI TURN set handle A 50

Technical Data

Diameter	50,0 mm	Total Height	26,0 mm

Note: Not suitable for safety-related applications.

Material / Colour		**Other Features**	
Material	PA66-GF	Weight	37,00 g
Colour	black	Static Breaking Load	44,00 kg
Logo Sticker Diameter	30,5 mm	Opening	turn
Assembly	Male: **TOOL 1** or **TOOL 3** or **TOOL 22** Female: **TOOL 2** or **TOOL 3**		

Ergonomic and very handy – the shape of the handle A makes operating the fastener particularly intuitive. Upon request, the handle is available in black (nylon) and almost every desired translucent or solid colour (polycarbonate, PC). The central carrier offers space for individual logo stickers.

MINI TURN set handle B 50

Article Number: 02020

The handle B presents convincing features with its sleek, round shape and black polycarbonate surface (PC). A rubber ring encircles the edge, providing a perfect grip and comfortable operation of the fastener. The central carrier offers space for individual logo stickers.

Technical Data

Diameter	50,0 mm	Total Height	23,0 mm

Note: The handle B variant of MINI TURN features a single-use catch mechanism and cannot be removed once it has been successfully fitted! Not suitable for safety-related applications.

Material / Colour		**Other Features**	
Material/Colour lower part	PA66-GF/black	Weight	38,00 g
Material/Colour upper part:	PC(polycarbonate)/black	Static Breaking Load	44,00 kg
Logo Sticker Diameter	30,5 mm	Opening	turn
Assembly	Male: **TOOL 1** or **TOOL 3** or **TOOL 22**. Female: **TOOL 2** or **TOOL 3**		

MINI TURN set handle C alu 40

Article Number: 02045

The handle C alu 40 is the smaller version of the handle C alu 50. With a diameter of 40mm, it is the discreet alternative to other aluminium fasteners. The individualization options correspond to those of the set handle C alu 50.

Technical Data

Diameter	40,0 mm	Total Height	23,0 mm

Note: Not suitable for safety-related applications.

Material / Colour		**Other Features**	
Material	silver anodised aluminium PA66-GF	Weight	40,00 g
Colour	upon request	Static Breaking Load	44,00 kg
Handle	with an integrated rubber ring on the edge	Opening	turn
Assembly	Male: **TOOL 1** or **TOOL 3** or **TOOL 22**. Female: **TOOL 2** or **TOOL 3**		

MINI TURN set handle C alu 50

Article Number: 02040

The MINI TURN set handle C features a high-quality aluminium surface which can be anodised with colour upon request. It also offers the ideal space for laser-engraved branding, transforming the fastener into a real eye-catcher. The integrated rubber ring ensures proper grip when turning the handle.

Technical Data

Diameter	50,0 mm	Total Height	23,0 mm

Note: Not suitable for safety-related applications.

Material / Colour		**Other Features**	
Material	silver anodised aluminium PA66-GF	Weight	46,00 g
Colour	upon request	Static Breaking Load	44,00 kg
Handle	with an integrated rubber ring on the edge	Opening	turn
Assembly	Male: **TOOL 1** or **TOOL 3** or **TOOL 22**. Female: **TOOL 2** or **TOOL 3**		

Article Number: 02030

MINI TURN set handle D 50

Technical Data

Diameter	50,0 mm	Total Height	30,0 mm

Note: The handle D features a single-use catch mechanism and cannot be removed once it has been sucessfully fitted! Not suitable for safety-related applications.

Material / Colour		**Other Features**	
Material	PA66-GF	Weight	43,00 g
Colour	black (others available)	Static Breaking Load	44,00 kg
Logo sticker diameter	36,5 mm	Opening	turn
Assembly	Male: **TOOL 1** or **TOOL 3** or **TOOL 22**. Female: **TOOL 2** or **TOOL 3**		

A handle that gets to grips: The handle D's overall height and recessed grip enable a firm grip in all situations and therefore guarantees safe one-handed operation. The central carrier offers space for individual logo stickers.

Article Number: 02055

MINI TURN set handle F alu 40

Technical Data

Diameter	40,0 mm	Total Height	23,0 mm

Note: Not suitable for safety-related applications.

Material / Colour		**Other Features**	
Material	silver anodised alu PA66-GF	Weight	40,00 g
Colour	colours upon request	Static Breaking Load	44,00 kg
Handle	with knurled edge	Opening	turn
Assembly	Male: **TOOL 1** or **TOOL 3** or **TOOL 22**. Female: **TOOL 2** or **TOOL 3**		

The handle F alu 40 is the smaller version of the handle F alu 50 with a knurled edge. The diameter of only 40 mm makes it a discreet alternative to other aluminium fasteners. The individualization options correspond to those of the set handle F alu 50.

Article Number: 02050

MINI TURN set handle F alu 50

Technical Data

Diameter	50,0 mm	Total Height	23,0 mm

Note: Not suitable for safety-related applications.

Material / Colour		**Other Features**	
Material	silver anodised alu PA66-GF	Weight	45,00 g
Colour	colours upon request	Static Breaking Load	44,00 kg
Handle	with knurled edge	Opening	turn
Assembly	Male: **TOOL 1** or **TOOL 3** or **TOOL 22**. Female: **TOOL 2** or **TOOL 3**		

This high-class, turned aluminium fastener impresses with its special haptics. The edge of the handle is knurled, which achieves a unique grip on the handle. The surface offers the ideal space for individual branding or lettering by laser engraving. Coloured anodisation is available upon request.

The buckle revolution for increased safety, functionality and ease of use

Fidlock's true alternative to the traditional buckle - the SLIDER product family: Its convincing „easy-entry" system is based on the tried-and-tested Fidlock concept (see page 2). Sliding laterally will open the fastener quickly and it closes automatically. Therefore, the SLIDER combines all the advantages of a magnetic and a snap fastener, ensuring an easy and comfortable one-handed operation. Options are available for 25 mm and 40 mm wide straps. Manufactured from fibre-glass reinforced nylon (PA), it is particularly stable. A variation of almost any colour offers product designers great flexibility. The optional "shield" logo plate is made of stainless steel or nylon an provides a unique space for individual logo design on the buckle.

Article Number: 04010

SLIDER 25

Technical Data

Strap width	25,0 mm	Engraving	not possible

Note: Not suitable for safety-related applications.

Material / Colour		**Other Features**	
Material	PA66-GF	Weight	22,35 g
Colour	black	Static Breaking Load	25,00 kg
		Opening	lateral slide

The SLIDER 25 is designed for 25 mm wide straps and characterised by its particularly high stability, thanks to the fibre-glass reinforced nylon (PA). Versatile applications are possible, depending on the implementation of the fastener on the product – e.g. rucksacks, bags or satchels.

SLIDER

SLIDER 25 STST shield

Article Number: 04050

The SLIDER 25 stainless steel shield boasts not only with excellent function but also elegance. Additionally, the SLIDER 25 stainless steel shield can be individualized with a logo.

Technical Data

For strap width	25,0 mm	Engraving	possible

Note: Not suitable for safety-related applications.

Material / Colour		**Other Features**	
Material	PA66-GF Stainless Steel	Weight	25,70 g
Colour	black	Static Breaking Load	25,00 kg
		Opening	lateral slide

SLIDER 25 plastic shield

Article Number: 04060

Uniquely, the SLIDER 25 plastic shield can be customized to feature raised logos, using special tools. Customization is also possible through printing or colour of the entire shield.

Technical Data

Strap width	25,0 mm	Engraving	possible

Note: Not suitable for safety-related applications.

Material / Colour		**Other Features**	
Material SLIDER	PA66-GF	Weight	25,70 g
Colour	black	Static Breaking Load	25,00 kg
		Opening	lateral slide

SLIDER 40

Article Number: 04100

The SLIDER 40 was developed for straps with a width of 40 mm. Customizing the buckle is possible by printing on the logo cover.

Technical Data

For strap width	40,0 mm

Note: Not suitable for safety-related applications.

Material / Colour		**Other Features**	
Material	PA66-GF	Weight	30,00 g
Colour	black	Static Breaking Load	30,00 kg
		Opening	lateral slide

Closing, joining and fixing - the universal fastener with versatile fields of application

The SNAP fasteners are not only the most compact, but also the most versatile solutions in the Fidlock portfolio. Of course, also the SNAP product family is based on the tested-and-tried Fidlock concept (see page 2), which combines the convenience of a magnetic fastener with a stable mechanical snap. As all our fastening systems, the SNAP models boast an automatic closing mechanism. They are opened by sliding laterally, thus enabling a simple one-handed operation. Thanks to the compact design, the different variations and the mechanical locking force, this universal fastener suits a wide range of applications. Some examples would be to close and join bags and items of clothing. Depending on the implementation of the fastener on the product, SNAPs are also ideally suited for fixing accessories or larger objects – such as an optional exterior bag or key attachment on a rucksack, car foot mats or even an easily removable bicycle basket. Product developers receive the right models and types of fitting for different materials and their thicknesses. Further possibilities are generated by product variations with high-grade metal covers in different materials and refined surfaces (brass, aluminium – e.g. polished, brushed, anodised, chrome-plated or gold-plated). The possibilities for individual and attractive designs allow the use of Fidlock SNAP fasteners on exclusive products.

male/female - flexible fastener solutions

The SNAP product family consists of a broad range of two-part connection pieces - the male (1) upper parts and the female (2) lower parts - which can be combined with each other in almost any configuration. Product designers are provided with adequate versions and fitting types for different materials and their thicknesses.

SNAP: sizes and range of application
The SNAP male and female parts are available in three different sizes – S, M, L. This does not only affect the compatibility of the components but also determines possible areas of application:
SNAP S: The smallest size of the SNAP components is primarily suitable for textile applications or low loads, e.g. as a fastener on small bags or collars. These fasteners are very compact and inconspicuous and therefore not suitable for luggage-linking.
SNAP M: The medium size of the SNAP components is ideally suited for every-day application areas, e.g. as a fastener on urban- or lifestyle bags. Additionally, M fasteners can be applied to textiles as slightly larger alternatives to the SNAP S components.
SNAP L: The largest size of the SNAP components is also the strongest and ideally suited for application areas which require hard-wearing fasteners with uniquely easy operation, for example as a connector of two bags, to attach a saddlebag or as a fastener on a school bag.

Article Number: 05010

SNAP male S screw low

S M L

Technical Data

For material thickness	0,5 -1,5 mm	Hole circle diameter	8,0 mm
Diameter	18,5 mm		

Note: The male parts are fully rotatable (e.g. belt attachments). Not suitable for safety-related applications.

Material / Colour		**Other Features**	
Material	PA66-GF	Weight	2,75 g
Colour	black	Static Breaking Load	2,00 kg
Fitting	Threaded swivel, face spanner		
Assembly	front: **TOOL 4** back: **TOOL 3** or **TOOL 5** or **TOOL 23**		

The SNAP male S screw low is the ideal upper fastener part (male) for materials with a thickness of 0,5 to 1,5 mm. The screw cap allows simple fitting. It is compatible with all SNAP female S parts.

SNAP

Please note that the load capacity and the suitability of the SNAP fasteners are dependent one the size of the components and custom application on the product.

SNAP male S screw mid

Article Number: 05715

S M L

For materials with a thickness of 1,4 to 2,9 mm, the SNAP male S screw mid is the perfect middle ground between the screw high and screw low. It is compatible with all SNAP female S lower parts.

Technical Data

For material thickness	1,4 - 2,9 mm	Hole circle diameter	8,0 mm
Diameter	18,5 mm		

Note: The male parts are fully rotatable (e.g. belt attachments). Not suitable for safety-related applications.

Material / Colour		**Other Features**	
Material	PA66-GF	Weight	2,36 g
Colour	black	Static Breaking Load	2,00 kg
Fitting	Threaded swivel, face spanner		
Assembly	front: **TOOL 4** back: **TOOL 3** or **TOOL 5** or **TOOL 23**		

SNAP male S screw high

Article Number: 05020

S M L

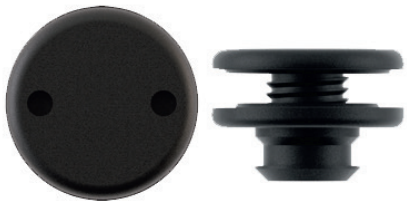

The SNAP male S screw high is designed for thicker materials of 2,8 to 4,0 mm. The featured screw cap has a longer threaded stem as the screw low or screw mid. It is compatible with all SNAP female S parts.

Technical Data

For material thickness	2,8 - 4,0 mm	Hole circle diameter	8,0 mm
Diameter	18,5 mm		

Note: The male parts are fully rotatable (e.g. belt attachments). Not suitable for safety-related applications.

Material / Colour		**Other Features**	
Material	PA66-GF	Weight	2,75 g
Colour	black	Static Breaking Load	2,00 kg
Fitting	Threaded swivel, face spanner		
Assembly	front: **TOOL 4** back: **TOOL 3** or **TOOL 5** or **TOOL 23**		

SNAP male S screw brass (alu) low

Article Number: 05033

S M L

This variation of the SNAP male S is characterised by its elegant brass cover. It can be used for material thicknesses ranging from 0,5 to 1,5 mm. The fastener is compatible with all SNAP female S components.

Technical Data

For material thickness	0,5 -1,5 mm	Hole circle diameter	8,0 mm
Diameter	18,5 mm		

Note: Not suitable for safety-related applications.

Material / Colour		**Other Features**	
Material	Aluminium, PA66-GF	Weight	7,10 g
Colour	brass	Static Breaking Load	2,00 kg
Fitting	Threaded swivel, face spanner		
Assembly	front: **TOOL 4** back: **TOOL 3** or **TOOL 5** or **TOOL 23**		

Please note that the load capacity and the suitability of the SNAP fasteners are dependent one the size of the components and custom application on the product.

Article Number: 05034

SNAP male S screw brass (alu) high

S M L

Technical Data

For material thickness	2,8 -4,0 mm	Hole circle diameter	8,0 mm
Diameter	18,5 mm		

Note: The male parts are fully rotatable (e.g. belt attachments). Please specify the desired material thickness in your enquiry. The length of the thread is then produced individually. Not suitable for safety-related applications.

Material / Colour		**Other Features**	
Material	Aluminium, PA66-GF	Weight	8,00 g
Colour	brass	Static Breaking Load	2,00 kg
Fitting	Threaded swivel, face spanner		
Assembly	front: **TOOL 4** back: **TOOL 3** or **TOOL 5** or **TOOL 23**		

The SNAP male S screw (alu) high is designed for thicker materials of 2,8 to 4,0 mm. Also characterised by its elegant brass cover, it differs from the SNAP male S screw (alu) low in the length of the threaded shaft on the screw cap. The fastener is compatible with all SNAP female S components.

Article Number: 05043

SNAP male S screw low alu

S M L

Technical Data

For material thickness	0,5 - 1,5 mm	Hole circle diameter	8,0 mm
Diameter	18,5 mm		

Note: The male parts are fully rotatable (e.g. belt attachments). Please specify the desired material thickness in your enquiry. The length of the thread is then produced individually. Not suitable for safety-related applications.

Material / Colour		**Other Features**	
Material	Aluminium:anodised PA66-GF	Weight	3,30 g
Colour	upon request	Static Breaking Load	2,00 kg
Fitting	Threaded swivel, face spanner		
Assembly	front: **TOOL 4** back: **TOOL 3** or **TOOL 5** or **TOOL 23**		

The SNAP male S screw low alu features a refined anodized aluminium cap and can be used for materials ranging between a thickness of 0,5 and 1,5 mm. The fastener is compatible with all SNAP female S components.

Article Number: 05044

SNAP male S screw high alu

S M L

Technical Data

For material thickness	2,8 -4,0 mm	Hole circle diameter	8,0 mm
Diameter	18,5 mm		

Note: The male parts are fully rotatable (e.g. belt attachments). Please specify the desired material thickness in your enquiry. The length of the thread is then produced individually. Not suitable for safety-related applications.

Material / Colour		**Other Features**	
Material	Aluminium:anodised PA66-GF	Weight	3,50 g
Colour	upon request	Static Breaking Load	2,00 kg
Fitting	Threaded swivel, face spanner		
Assembly	front: **TOOL 4** back: **TOOL 3** or **TOOL 5** or **TOOL 23**		

The SNAP male S screw high alu is distinguished from the screw low alu by its longer threaded shaft, allowing compatibility with material thicknesses of 2,8 to 4,0 mm. It is compatible with all SNAP female S parts.

SNAP

Please note that the load capacity and the suitability of the SNAP fasteners are dependent one the size of the components and custom application on the product.

SNAP male S sewable

Article Number: 05451

S M L

The SNAP male S sewable offers a thin nylon sewing strip, making it the ideal choice to be sewn directly onto or into the materials. It is compatible with all SNAP female S counterparts.

Technical Data

Hole circle diameter	17,0 mm	Diameter	27,2 mm
Height	8,0 mm		

Note: The male parts are fully rotatable (e.g. belt attachments). Not suitable for safety-related applications.

Material / Colour		**Other Features**	
Material	PA66-GF	Weight	2,00 g
Colour	black	Static Breaking Load	2,00 kg
Fitting	Glueing, sewing		

SNAP male S sewable adjuster

Article Number: 05455

S M L

The SNAP male S sewable adjuster combines the benefits of a nylon sewing strip with vernier adjustment. Depending on the implementation of the fastener on the product, this component is practically predestined to be used on Jacket collars, e.g. motorbike jackets. It is compatible with the SNAP female S components.

Technical Data

Dimensions (WxLxH)	26,5 x 66,0 x 8,2 mm

Note: The SNAP male S sewable adjuster fits to the SNAP female S products. Best use would be with a SNAP push female S product on a jacket collar. Not suitable for safety-related applications.

Material / Colour		**Other Features**	
Material	PA66-GF Guide rail: PA6	Weight	3,80 g
Colour	black	Static Breaking Load	n/a
Fitting	Glueing, sewing		

SNAP male S 6 spring

Article Number: 05060

S M L

This upper part (male) of the SNAP series features a 6,0 mm long, cylindrical stem onto which an axle clamp ring is pressed (press required). Suitable for concealed fitting, it is compatible with all SNAP female S products. hhh

Technical Data

Hole circle diameter	8,0 mm	Height	6,0 mm

Note: The male parts are fully rotatable (e.g. belt attachments). The SNAP male S 6 spring is suitable for a material thickness of 0 to 3 mm for concealed fitting. Not suitable for safety-related applications.

Material / Colour		**Other Features**	
Material	PA66-GF	Weight	2,45 g
Material axle clamp ring	galvanised steel	Static Breaking Load	2,00 kg
Colour	Black		

Please note that the load capacity and the suitability of the SNAP fasteners are dependent one the size of the components and custom application on the product.

Article Number: 05061

SNAP male S 6 springcap

S M L

Technical Data

Hole circle diameter	8,0 mm	Height	6,0 mm

Note: The SNAP male S 6 springcap is suitable for a material thickness of 0 to 3 mm and offers a high-quality, visible closure for fitting on bags, for example. Not suitable for safety-related applications.

Material / Colour		**Other Features**	
Material	PA66-GF	Weight	2,45 g
Material axle clamp ring	nickel-plated steel	Static Breaking Load	2,00 kg
Colour	black		

This variant differs from the SNAP male S 6 spring through the elegant axle clamp cover for visible closure (press required). It features a 6 mm cylindrical stem and is compatible with all SNAP female S counterparts.

Article Number: 05062

SNAP male S 10 spring

S M L

Technical Data

Hole circle diameter	8,0 mm	Height	10,0 mm

Note: The male parts are freely rotatable (e.g belt attachments). The SNAP male S 10 spring is suitable for a material thickness of 0 to 7 mm for concealed fitting. Not suitable for safety-related appliations.

Material / Colour		**Other Features**	
Material	PA66-GF	Weight	2,45 g
Material axle clamp ring	galvanised steel	Static Breaking Load	2,00 kg
Colour	black		

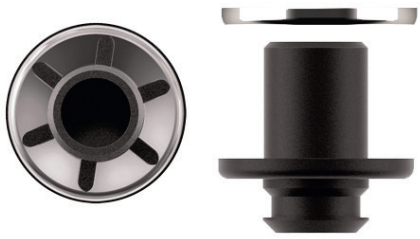

The SNAP male S 10 spring features a 10 mm long, cylindrical stem onto which an axle clamp ring is pressed (press required), allowing concealed fitting. This upper part (male) is compatible with all SNAP female S lower parts.

Article Number: 05063

SNAP male S 10 springcap

S M L

Technical Data

Hole circle diameter	8,0 mm	Height	10,0 mm

Note: The SNAP male S 10 springcap is suitable for a material thickness of 0 to 7 mm and offers a high-quality, visible closure for fitting on bags, for example. Not suitable for safety-related applications.

Material / Colour		**Other Features**	
Material	PA66-GF	Weight	2,45 g
Material axle clamp ring	nickel-plated steel	Static Breaking Load	2,00 kg
Colour	black		

This variant is distinguishable from the SNAP male S 10 spring through the elegant axle clamp cover for visible closure (press required). It features a 10 mm cylindrical stem and is compatible with all SNAP female S counterparts.

SNAP

Please note that the load capacity and the suitability of the SNAP fasteners are dependent one the size of the components and custom application on the product.

SNAP male S add on

Article Number: 05003

S M L

The SNAP male S add on provides firm support with double protection. The add on is attached to a SNAP male S fastener (not included). Designed for products that require a higher level of security, the add on features a two-step opening process: Turn, then slide laterally. It is compatible with 05200, 05100 and 05300.

Technical Data

Hole circle diameter	8,0 mm	Diameter	23,8 mm

Note: The male parts are fully rotatable (e.g. belt attachments). Additional module for male S screw high available. Not suitable for safety-related applications. SNAP male S not included.

Material / Colour		**Other Features**	
Material	PA66-GF	Weight	1,20 g
Fitting	Threaded swivel, face Spanner	Static Breaking Load	2,00 kg
Colour	black		

SNAP male S rope

Article Number: 05047

S M L

The SNAP male S rope is practically predestined as a fastener for jacket collars or sleeves. Using an O-ring instead of the rope makes it ideal to connect objects. The male S rope is compatible with all SNAP female S products.

Technical Data

For material thickness	3,0 mm	Rope	3,0 mm
Diameter	18,5 mm	Min. overall height	12,0 mm

Note: Also compatible with a rubber O-ring instead of the rope. Neither rope nor O-ring included in scope of delivery. Compatible with all SNAP female S products. Not suitable for safety-related applications.

Material / Colour		**Other Features**	
Material	PA66-GF	Weight	2,30 g
Colour	black	Static Breaking Load	2,00 kg
Assembly	front: **TOOL 4** back: **TOOL 18**		

SNAP male M Bolt -M5 x 8mm

Article Number: 05150

S M L

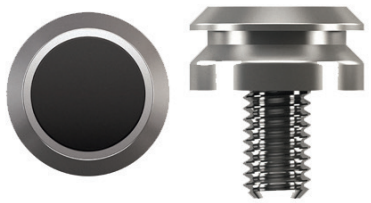

Screw and fastener in one, this (male) part is ideally suited for secure mounting, fixing or fastening. The M5 thread allows the fitting to bikes or the use in the mechanical engineering sector. The SNAP male M Bolt is compatible with various SNAP female M products.

Technical Data

For material thickness	8,0 mm	Hole Circle Diameter	5,0 mm
Diameter	13,0 mm	Shaft Length	8,0 mm

Note: The male parts are fully rotatable (e.g. belt attachments). Can be combined with SNAP push female M and SNAP pull female M products. Not suitable for safety-related applications.

Material / Colour		**Other Features**	
Material	Aluminium, steel	Weight	5,00 g
Colour	aluminium	Static Breaking Load	60,00 kg
Fitting	Screw into M5 threaded nut		

Please note that the load capacity and the suitability of the SNAP fasteners are dependent one the size of the components and custom application on the product.

Article Number: 05151

SNAP male M Bolt -M5 x 18mm

S M L

Technical Data

For material thickness	18,0 mm	Hole Circle Diameter	5,0 mm
Diameter	13,0 mm	Shaft Length	8,0 mm

Note: The male parts are fully rotatable (e.g. belt attachments). Can be combined with SNAP push female M and SNAP pull female M products. Not suitable for safety-related applications.

Material / Colour		**Other Features**	
Material	Aluminium, steel	Weight	6,50 g
Colour	aluminium	Static Breaking Load	60,00 kg
Fitting	Screw into M5 threaded nut		

As screw and fastener in one, this SNAP male M bolt features a longer M5 screw thread of 18,00 mm. The M5 allows the fitting onto bikes or the use in the mechanical engineering sector. This male Part is compatible with various SNAP female M counterparts.

Article Number: 05121

SNAP male M 25 adjuster

S M L

Technical Data

For strap width	25,0 mm	Triglide Strap	single
Shaft snap-in mounting foot	13,0 mm		

Note: The male M 25 adjuster is compatible with the SNAP push female M 25 LL and the SNAP pull female M 20. Not suitable for safety-related applications.

Material / Colour		**Other Features**	
Material	PA66-GF	Weight	6,50 g
Colour	black	Static Breaking Load	15,00 kg

The SNAP male M 25 adjuster is the compact upper fastener part in the time-tested streamlined design. It is threaded directly and movable onto the strap and compatible with the SNAP push female M 25 LL and the SNAP pull female M20.

Article Number: 05122

SNAP male M screw low

S M L

Technical Data

For material thickness	0,5 - 2,5 mm	Hole Circle Diameter	23,0 mm
Diameter	31,0 mm	Mounting foot	13,0 mm

Note: Not suitable for safety-related applications.

Material / Colour		**Other Features**	
Material	PA66-GF	Weight	7,00 g
Colour	black	Static Breaking Load	15,00 kg
Fitting	Screw collar, face Spanner		
Assembly	front: **TOOL 3** or **TOOL 9** back: **TOOL 3** or **TOOL 7** or **TOOL 23**		

The SNAP male M screw low was designed for materials with a thickness of 0,5 to 2,5 mm. The fitting to materials is through a screw collar and it is compatible with SNAP push female M and the SNAP pull female M components.

SNAP

Please note that the load capacity and the suitability of the SNAP fasteners are dependent one the size of the components and custom application on the product.

SNAP male M screw high

Article Number: 05123

Ⓢ Ⓜ Ⓛ

This variant of the SNAP male M screw features a longer screw collar, suitable for Materials with a thickness of 2,0 to 4,5 mm. It is compatible with the SNAP push female M and SNAP pull female M components.

Technical Data

For material thickness	2,0 -4,5 mm	Hole Circle Diameter	23,0 mm
Diameter	31,0 mm	Mounting foot	13,0 mm

Note: Not suitable for safety-related applications.

Material / Colour		**Other Features**	
Material	PA66-GF	Weight	7,00 g
Colour	black	Static Breaking Load	15,00 kg
Fitting	Screw Collar, face Spanner		
Assembly	front: **TOOL 3** or **TOOL 9** back: **TOOL 3** or **TOOL 7** or **TOOL 23**		

SNAP male L Bolt -M5 x 7mm

Article Number: 05155

Ⓢ Ⓜ Ⓛ

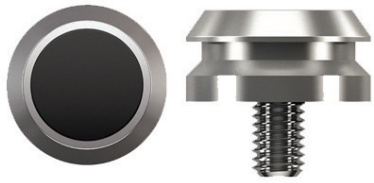

As screw and fastener in one, the SNAP male L Bolt is the larger Version of the SNAP M Bolt. With a 7,0 mm long M5 thread and a head-width of 17,2 mm it can be combined with the SNAP L female components, creating a robust fastening or fixing point. The M5 thread makes the SNAP male L Bolt ideally suitable for bikes or applications in mechanical engineering.

Technical Data

For material thickness	7,0 mm	Hole Circle Diameter	5,0 mm
Diameter	17,2 mm	Lenght shaft	7,0 mm

Note: The male parts are fully rotatable. Can be combined with SNAP push female L and SNAP pull female L. Not suitable for safety-related applications.

Material / Colour		**Other Features**	
Material	Aluminium, steel	Weight	7,00 g
Colour	aluminium	Static Breaking Load	60,00 kg
Fitting	Screw into M5 threaded nut		

SNAP male L Bolt -M5 x 17mm

Article Number: 05156

Ⓢ Ⓜ Ⓛ

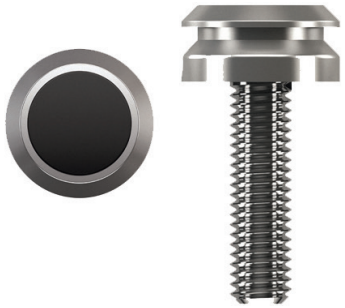

Long and wide – this variant of the SNAP male L Bolt features a head-width of 17,2 mm and a thread of 17,00 mm in length. Combined with the corresponding SNAP female L components, it creates a robust fastening or fixing point. It is ideal for typical M5 threads on bikes or in mechanical engineering.

Technical Data

For material thickness	17,0 mm	Hole Circle Diameter	5,0 mm
Diameter	17,2 mm	Length shaft	17,0 mm

Note: The male parts are fully rotatable. Can be combined with SNAP push female L and SNAP pull female L. Not suitable for safety-related applications

Material / Colour		**Other Features**	
Material	Aluminium, steel	Weight	8,50 g
Colour	aluminium	Static Breaking Load	60,00 kg
Fitting	Screw into M5 threaded nut		

Please note that the load capacity and the suitability of the SNAP fasteners are dependent one the size of the components and custom application on the product.

Article Number: 05099

SNAP male L 25 adjuster

S M L

Technical Data

For strap width	25,0 mm	Triglide strap	single
Height	16,0 mm		

Note: The SNAP male L25 adjuster is compatible with all SNAP female L products. Not suitable for safety-related applications.

Material / Colour		**Other Features**	
Material	PA66-GF	Weight	8,00 g
Colour	black	Static Breaking Load	30,00 kg

The SNAP male L 25 adjuster is the ideal upper part (male) for flexible adjustment of belt straps and higher load capacities than the M version. Once threaded onto the webbing, the fastener remains movable. It is compatible with the SNAP push female L and the SNAP pull female L components.

Article Number: 05007

SNAP male L screw low

S M L

Technical Data

For material thickness	0,5 -1,5 mm	Hole Circle Diameter	20,0 mm
Diameter	32,7 mm	Diameter shaft	17,0 mm

Note: The SNAP male L screw low is compatible with the SNAP push female L 25 LL and SNAP pull female L 25. Not suitable for safety-related applications.

Material / Colour		**Other Features**	
Material	PA66-GF	Weight	9,00 g
Colour	black	Static Breaking Load	30,00 kg
Fitting	Screw collar, face spanner		
Assembly	front: **TOOL 10** back: **TOOL 3** or **TOOL 7** or **TOOL 23**		

The SNAP male L screw low is designed for materials with a thickness of 0,5 to 1,5 mm and higher load capacities than the M version. Fitted through a screw collar, this male part is compatible with the SNAP push female L 25 LL and SNAP pull female L 25.

Article Number: 05008

SNAP male L screw high

S M L

Technical Data

For material thickness	1,5 - 2,5 mm	Hole Circle Diameter	23,0 mm
Diameter	32,7 mm	Diameter shaft	17,0 mm

Note: The SNAP male L screw high is compatible with the SNAP push female L 25 and SNAP pull female L. Not suitable for safety-related applications.

Material / Colour		**Other Features**	
Material	PA66-GF	Weight	9,00 g
Colour	black	Static Breaking Load	30,00 kg
Fitting	Screw collar, face spanner		
Assembly	front: **TOOL 10** back: **TOOL 3** or **TOOL 7** or **TOOL 23**		

The SNAP male L screw low is designed for materials with a thickness of 0,5 to 1,5 mm and higher load capacities than the M version. Fitted through a screw collar, this male part is compatible with the SNAP push female L 25 LL and SNAP pull female L 25.

SNAP

Please note that the load capacity and the suitability of the SNAP fasteners are dependent one the size of the components and custom application on the product.

SNAP male L screw cap

Article Number: 05009

Ⓢ Ⓜ Ⓛ

The SNAP male L screw cap is ideal for applications requiring water resistance. Depending on the implementation of the fastener on the product, it can be applied to e.g. outdoor and bicycle bags. This component features an especially flat screw cap and is compatible with the SNAP push female L 25 LL and the SNAP pull female L 25.

Technical Data

For material thickness	0,5 - 1,5 mm	Hole Circle Diameter	20,0 mm
Diameter	32,7 mm	Mounting foot	17,0 mm

Note: The SNAP male L screw cap is compatible with the SNAP push female L 25 LL and SNAP pull female L 25. Not suitable for safety-related applications.

Material / Colour		**Other Features**	
Material	PA66-GF	Weight	10,00 g
Colour	black	Static Breaking Load	30,00 kg
Fitting	Screw collar, face spanner		
Assembly	front: **TOOL 10** back: **TOOL 3** or **TOOL 8**		

SNAP male L tube clip

Article Number: 05232

Ⓢ Ⓜ Ⓛ

This alternative to the SNAP male L fastener can be attached to any pole or bar, within the set diameter. The SNAP male L tube clip is attached through screws (included in the scope of delivery) and compatible with the SNAP pull female L 25 and the SNAP push female L 25 LL. A freely rotatable version is available, which can be combined with the SNAP female L components.

Technical Data

For pole/bar diameter	24,0 - 27,0 mm
Dimensions (W X L X H)	30,0 x 40,0 x 40,0 mm

Note: Direction specified by geometry of fastener - option for freely rotatable version upon request. Not suitable for safety-related applications.

Material / Colour		**Other Features**	
Material	PA66-GF	Weight	14,00 g
Colour	black	Static Breaking Load	30,00 kg

SNAP male L 40 - RLS

Article Number: 05250

Ⓢ Ⓜ Ⓛ

The SNAP male L 40 is a special SNAP male part which can be attached to 40,00 mm webbing and has an added safety feature: It can only be opened by sliding laterally in a certain direction. Compatible components are the SNAP female L products.

Technical Data

For strap width	40,0 mm
Dimensions (W X L X H)	47,6 x 55,4 x 14,1 mm

Note: Not suitable for safety-related applications.

Material / Colour		**Other Features**	
Material	PA66-GF, ABS	Weight	20,00 g
Colour	black	Static Breaking Load	30,00 kg

Note: The male fasteners must always be paired with a female fastener. On the following pages, you can find the female fasteners compatible with the above mentioned male fasteners. Alternatively, the fasteners in the SNAP push and SNAP pull categories can also be paired with the SNAP male fasteners.

Please note that the load capacity and the suitability of the SNAP fasteners are dependent one the size of the components and custom application on the product.

Article Number: 05100

SNAP female S screw low

S M L

Technical Data

For material thickness	0,5 - 1,5 mm	Hole Circle Diameter	20,0 mm
Diameter	32,7 mm	Diameter shaft	9,5 mm

Note: Not suitable for safety-related applications.

Material / Colour		**Other Features**	
Material	PA66-GF	Weight	5,50 g
Colour	black	Static Breaking Load	2,00 kg
		Opening	lateral slide
Assembly	front: **TOOL 6** or **TOOL 23** back: **TOOL 3** or **TOOL 7** or **TOOL 23**		

The lower fastener part SNAP female S screw low is simply fitted with a screw collar in materials with a thickness of 0,5 to 1,5 mm and therefore suitable for a variety of applications. It is compatible with all SNAP male S products.

Article Number: 05200

SNAP female S screw high

S M L

Technical Data

For material thickness	2,5 - 3,5 mm	Hole Circle Diameter	23,0 mm
Diameter	32,7 mm	Diameter shaft	11,0 mm

Note: Not suitable for safety-related applications.

Material / Colour		**Other Features**	
Material	PA66-GF	Weight	5,80 g
Colour	black	Static Breaking Load	2,00 kg
		Opening	lateral slide
Assembly	front: **TOOL 6** or **TOOL 23** back: **TOOL 3** or **TOOL 7** or **TOOL 23**		

The lower fastener part SNAP female S screw high is designed for thicker materials of 2,5 to 3,0 mm and is simply fitted by a screw collar. It is compatible with all SNAP male S components.

Article Number: 05450

SNAP female S sewable

S M L

Technical Data

Hole Circle Diameter	19,0 mm	Diameter	30,0 mm
Min. Height	9,5 mm		

Note: Not suitable for safety-related applications.

Material / Colour		**Other Features**	
Material	PA66-GF / PA6	Weight	3,00 g
Colour	black	Static Breaking Load	2,00 kg
Fitting	Glueing, sewing	Opening	lateral slide

This SNAP female S was designed to be sewn directly into or onto textiles, using its thin nylon strip and an appropriate machine. It is compatible with the SNAP male S sewable as well as other SNAP male S counterparts.

SNAP

Please note that the load capacity and the suitability of the SNAP fasteners are dependent one the size of the components and custom application on the product.

SNAP female S round rivet

Article Number: 05140

S M L

This Version of the SNAP female S fastener has an additional mode of assembly. For added security, it can also be attached by two rivets. Compatible counterparts are the SNAP male S fasteners.

Technical Data

Min. overall Height	5,5 mm	Hole Circle Diameter	20,0 mm

Note: Not suitable for safety-related applications.

Material / Colour		**Other Features**	
Material	PA66-GF	Weight	5,50 g
Colour	black	Static Breaking Load	2,00 kg
		Opening	lateral slide

SNAP female S rivet V

Article Number: 05300

S M L

The SNAP female S rivet V can be attached with screws or rivets. In this case, the opening direction runs vertically. Compatible counterparts are all SNAP male S products.

Technical Data

Min overall Height	14,0 mm

Note: Not suitable for safety-related applications.

Material / Colour		**Other Features**	
Material	PA66-GF	Weight	4,45 g
Colour	black	Static Breaking Load	2,00 kg
		Opening	lateral slide

SNAP female S rivet H

Article Number: 05400

S M L

The SNAP female S rivet H can be attached with screws or rivets. It is distinguishable to the SNAP female S rivet V by the horizontal opening direction. Compatible counterparts are the SNAP male S products.

Technical Data

Min. overall Height	14,0 mm

Note: Not suitable for safety-related applications.

Material / Colour		**Other Features**	
Material	PA66-GF	Weight	4,45 g
Colour	black	Static Breaking Load	2,00 kg
		Opening	lateral slide

Please note that the load capacity and the suitability of the SNAP fasteners are dependent one the size of the components and custom application on the product.

Article Number: 05103

SNAP female S screw cap

S M L

Technical Data

For material thickness	0,5 - 1,5 mm	Hole Circle Diameter	20,0 mm
Diameter	32,7 mm	Min overall Height	16,5 mm

Note: The female S screw cap is waterproof when fitted with an O-ring (not included). Not suitable for safety-related applications.

Material / Colour		**Other Features**	
Material	PA66-GF / PA6	Weight	6,30 g
Colour	black	Static Breaking Load	2,00 kg
Fitting	Threaded swivel	Opening	lateral slide
Assembly	front: **TOOL 6** or **TOOL 23** back: **TOOL 3** or **TOOL 8**		

Waterproof and an especially flat screw cap – the SNAP female S screw cap it the ideal fastener for applications like outdoor or bicycle bags. It is compatible with all SNAP male S counterparts.

Article Number: 05452

SNAP female S adjuster

S M L

Technical Data

For strap width	15,0 mm
Dimension (W X L X H)	20,0 x 31,9 x 11,7 mm

Note: Not suitable for safety-related applications.

Material / Colour		**Other Features**	
Material	PA6	Weight	3,20 g
Colour	black	Static Breaking Load	2,00 kg
		Opening	lateral slide

The SNAP female S adjuster combines the benefits of a SNAP fastener with easy fitting and adjustability: Once threaded onto the webbing, the fastener remains movable. Compatible counterparts are all SNAP S fasteners.

Article Number: 05311

SNAP female S pin rivet X2

S M L

Technical Data

Dimensions (W X L X H)	25,6 x 20,3 x 9,5mm

Note: Pin rivets not included in scope of delivery. Not suitable for safety-related applications.

Material / Colour		**Other Features**	
Material	PA66-GF / PA6	Weight	3,20 g
Colour	black	Static Breaking Load	2,00 kg
Attachment	pin rivets x2	Opening	lateral slide

The SNAP female S pin rivet is a smaller alternative to the other SNAP female S rivet fasteners, a difference being the invisible pin rivets. The fastener can be fitted without punching a hole. Ideal for textile applications, the pin rivet X2 is compatible with all SNAP male S counterparts.

SNAP

Please note that the load capacity and the suitability of the SNAP fasteners are dependent one the size of the components and custom application on the product.

SNAP female S pin rivet X3

Article Number: 05310

S M L

As the SNAP female S pin rivet X2, the rivet X3 can also be attached by invisible rivets with no need of punching a hole first. This Variant differs from the X2 in its slightly other appearance and the additional third rivet. Compatible counterparts are all SNAP male S products.

Technical Data

Dimensions (W X L X H)	23,0 x 23,5 x 9,5mm		

Note: Pin rivets not included in scope of delivery. Not suitable for safety-related applications.

Material / Colour		**Other Features**	
Material	PA66-GF / PA6	Weight	3,80 g
Colour	black	Static Breaking Load	2,00 kg
Attachment	pin rivets x3	Opening	lateral slide

SNAP female M screw

Article Number: 05500

S M L

The SNAP female M screw is the medium-sized variant of the SNAP female screw fasteners and was designed for material thicknesses of 0,5 to 2,4 mm. It is fitted easily due to the practical screw sleeve and provides the ideal combination of compactness and stability. It is compatible with all SNAP male M parts.

Technical Data

For material thickness	0,5 - 2,5 mm	Hole Circle Diameter	27,0 mm
Diameter	40,0 mm	Min overall Height	13,5 mm

Note: Not suitable for safety-related applications.

Material / Colour		**Other Features**	
Material	PA66-GF / PC	Weight	11,00 g
Colour	black	Static Breaking Load	15,00 kg
		Opening	lateral slide
Assembly	front: no tool back: **TOOL 1** or **TOOL 3** or **TOOL 22**		

SNAP female L screw

Article Number: 05600

S M L

The SNAP female L screw can be attached to materials with a thickness of 0,5 to 2,5 mm, due to the easily fitted screw sleeve. Compared to the smaller SNAP female screw variants, it offers a higher static breaking load. It can be combined with all SNAP male parts.

Technical Data

For material thickness	0,5 - 2,5 mm	Hole Circle Diameter	36,0 mm
Diameter	50,0 mm	Min overall Height	15,0 mm

Note: Not suitable for safety-related applications.

Material / Colour		**Other Features**	
Material	PA66-GF / PC	Weight	16,60 g
Colour	black	Static Breaking Load	30,00 kg
		Opening	lateral slide
Assembly	front: no tool back: **TOOL 2** or **TOOL 3** or **TOOL 22**		

Note: All female SNAP fasteners need a male fastener part. Should you need help with combinations, please contact our sales team.

The automatic fastener - easy magnetic closure that holds under extremely high tensile forces

Fidlock is presenting the next generation of the well-known buckle: The SNAP buckle product family. Its convincing fastening system is based on the tried-and-tested Fidlock concept, which usefully combines the advantages of a magnetic and a snap fastener. The SNAP buckle closes automatically and opens by easily sliding laterally: Convenient, functional and fun. This allows operation with one hand, leaving a spare hand to ensure the users' safety. Product variants of the SNAP buckle are available for straps with a 15 mm, 20 mm and 30 mm width. It is also available with a piping fitting option, especially for chest strap fasteners.

Article Number: F6020

SNAP buckle 15

Technical Data

For strap width	15,0 - 16,0 mm	Ladderlock	one-sided
Dimensions (W x L x H)	30 x 46 x 12,5 mm		

Note: Not suitable for safety-related applications. The SNAP buckle 15 features our Fidlock logo.

Material / Colour		**Other Features**	
Material	PA66-GF	Weight	12,40 g
Colours	black	Static Breaking Load	55,00 kg
		Opening	lateral slide

The SNAP buckle 15 is designed for straps with a width of 15 mm to 16 mm. It is available for standard applications such as rucksack chest strap buckles, depending on the implementation of the fastener on the product.

SNAP buckle 20

Article Number: F6021

The SNAP buckle 20 is a variant of the SNAP buckle 15, designed for a strap width of 20 mm. It is available for standard applications such as rucksack chest strap buckles, depending on the implementation of the fastener on the product.

Technical Data

Strap width	20,0 mm	Ladderlock	one sided
Dimensions (W x L x H)	27 x 46,5 x 13 mm		

Note: Not suitable for safety-related applications. The SNAP buckle 20 features our Fidlock logo.

Material / Colour		**Other Features**	
Material	PA66-GF	Weight	14,70 g
Colour	black	Static Breaking Load	55,00 kg
		Opening	lateral slide

SNAP buckle combi 15

Article Number: F6010

This fastener combines the female part of the SNAP buckle with a SNAP male screw or a SNAP male spring, creating new possibilities. Depending on the implementation of the fastener on the product, an example would be conveniently fixing an open rucksack chest strap to a shoulder strap.

Technical Data

Strap width	15,0 - 16,0 mm	Ladderlock	one sided
Dimensions (W x L x H)	25 x 36,5 x 13,5 mm	Hole Circle Diameter	8,0 mm

Note: As a courtesy, both high and low SNAP male parts are included in sample orders. When placing a bulk order please specify whether you need a high or low SNAP male part. Alternatively, the combi buckle is also compatible with the SNAP male S spring and SNAP male S sewable adjuster. Not suitable for safety-related applications. The SNAP buckle combi 15 features our Fidlock logo.

Material / Colour		**Other Features**	
Material	PA66-GF	Weight	7,50 g
Colour	black	Static Breaking Load	2,00 kg
		Opening	lateral slide

SNAP buckle combi 20

Article Number: F6011

This model of the SNAP buckle combi is designed for 20 mm wide straps and combines a SNAP buckle with a SNAP male screw or male spring, creating new possibilities. Depending on the implementation of the fastener on the product, an example would be conveniently fixing a rucksack chest strap to a shoulder strap.

Technical Data

Strap width	20,0 -21,0 mm	Hole Circle Diameter	8,0 mm
Dimensions (W x Lx H)	27 x 37 x 13,5 mm	Ladderlock	one sided

Note: As a courtesy, both high and low SNAP male parts are included in sample orders. When placing a bulk order please specify whether you need a high or low SNAP male part. Alternatively, the combi buckle is also compatible with the SNAP male S spring and SNAP male S sewable adjuster. Not suitbale for safety-related applications. The SNAP buckle combi 20 features our Fidlock logo.

Material / Colour		**Other Features**	
Material	PA66-GF	Weight	7,50 g
Colour	black	Static Breaking Load	2,00 kg
		Opening	lateral slide

Article Number: F6030

SNAP buckle piping

Technical Data

Strap width	15,0 - 16,0 mm	Ladderlock	one sided
Dimensions (W x L x H)	30 x 44 x 12,5 mm	Piping	fitting

Note: Webbing can be fixed to the ladderlock with a rubber O-ring (not included). Not suitable for safety-related applications. The SNAP buckle piping features our Fidlock logo.

Material / Colour		**Other Features**	
Material	PA66-GF	Weight	10,00 g
Colour	black	Static Breaking Load	40,00 kg
		Opening	lateral slide

Suitable for a 15 to 16 mm width, the SNAP buckle piping was specially designed for chest straps, fixed with piping to the shoulder straps.

Article Number: F8040

SNAP buckle flat 25

Technical Data

Strap width	25,0 mm	Ladderlock	one sided
Dimensions (W x L x H)	36 x 56 x 10 mm		

Note: Not suitable for safety-related applications.

Material / Colour		**Other Features**	
Material	PA66-GF	Weight	16,00 g
Colour	black	Static Breaking Load	40,00 kg
		Opening	lateral slide

The SNAP buckle flat 25 is a particularly flat and elegant fastener, designed for 25 mm wide straps. Its unique design is achieved by the integration of a flat and stable metal spring. Personal branding is possible by using pad printing.

Article Number: F8010

SNAP buckle flat 30

Technical Data

Strap width	30,0 mm	Ladderlock	one sided
Dimensions (W x Lx H)	41 x 60 x 10 mm		

Note: Not suitable for safety-related applications. The SNAP buckle flat 30 features our Fidlock logo.

Material / Colour		**Other Features**	
Material	PA66-GF	Weight	21,00 g
Colour	black	Static Breaking Load	45,00 kg
		Opening	lateral slide

This larger version of the SNAP buckle flat was designed for straps with a width of 30 mm. Its uniquely flat design is achieved by the integration of a flat and stable metal spring.

SNAP buckle flat 40

Article Number: F8022

Designed for 40 mm wide straps, this is the largest version of the SNAP buckle flat models. Its uniquely flat design is achieved by the integration of a flat and stable metal spring. A perfect, larger space is given for branding by pad printing.

Technical Data

Strap width	40,0 mm	Ladderlock	one sided
Dimensions (W x L x H)	48,4 x 74 x 10 mm		

Note: Not suitable for safety-related applications.

Material / Colour		**Other Features**	
Material	PA66-GF	Weight	25,00 g
Colour	black	Static Breaking Load	40,00 kg
		Opening	lateral slide

Increased safety thanks to one-hand operation, even when wearing gloves

With the SNAP helmet buckle product family, Fidlock is revolutionizing the traditional helmet buckle. Thanks to the Fidlock concept, the SNAP helmet buckle can be opened by simply sliding laterally – only with two fingers. Even gloves don't prevent a quick and effortless one-handed operation. Unlike other helmet buckles, the SNAP helmet buckle closes automatically, eliminating the risk of pinching the skin. Due to carbon-fibre and long-fibre reinforced nylon, the SNAP helmet buckle achieves highest levels of stability and a static breaking load of up to 80 kg. This innovative and particularly safe product family is available for 15 to 20 mm wide straps and serves a variety of standards in the sports helmet industry.

The comprehensive safety, functionality and great ease of use of helmets with the "one-hand-fastener" are confirmed by acknowledgements. For example, the helmet manufacturer Nutcase received the Eurobike Award 2010 for two models featuring the Fidlock SNAP fastener.

Article Number: F7020

SNAP helmet buckle 15 durethan Fidlock

Technical Data

Strap width	15,0 mm	Ladderlock	one sided
Dimensions (W x L x H)	30 x 46 x 14 mm		

Note: Also available with clip for thinner straps. Not suitable for the use on motorcycle helmets. The SNAP helmet buckles feature our Fidlock logo.

Material / Colour

Material	PA6
Colour	black

Other Features

Weight:	13,00 g
Static Breaking Load:	65,00 kg
Opening:	lateral slide

The sturdy fastener for helmet with 15 mm wide straps and a Static Breaking Load of 75 kg. The long-fibre-reinforced nylon (PA) gurantees maximum stability. The closure comes with debossed Fidlock logo.

SNAP helmet buckle 20 durethan Fidlock

Article Number: F7021

This variant of the SNAP helmet buckle was designed for 20 mm wide straps and holds a static breaking load of 65 kg. The SNAP helmet buckles feature our Fidlock logo.

Technical Data

Strap width	20,0 mm	Ladderlock	one sided
Dimensions (W x Lx H)	27 x 46,5 x 13 mm		

Note: Variant for thinner or single straps available upon request. To suitable for the use on motorcycle helmets.

Material / Colour		**Other Features**	
Material	PA6	Weight	14,70 g
Colour	black	Static Breaking Load	65,00 kg
		Opening	lateral slide

SNAP helmet buckle 15 grivory Fidlock

Article Number: F7024

This helmet buckle was designed for 15 mm wide straps. The long-fibre-reinforced nylon (PA) guarantees maximum stability and generates a static breaking load of up to 75 kg. The SNAP helmet buckles feature our Fidlock logo.

Technical Data

Strap width	15,0 mm	Ladderlock	one sided
Dimensions (W x L x H)	30 x 46 x 14 mm		

Note: Also available with clip with thinner straps. Not suitable for the use on motorcycle helmets.

Material / Colour		**Other Features**	
Material	PA6 / 66	Weight	13,00 g
Colour	black	Static Breaking Load	75,00 kg
		Opening	lateral slide

SNAP helmet buckle 20 grivory Fidlock

Article Number: F7026

For webbing with a width of 20 mm, the helmet buckle 20 grivory 40 is a larger variant of the SNAP helmet buckle, bearing a static breaking load of up to 75 kg. The SNAP helmet buckles feature our Fidlock logo.

Technical Data

Strap width	20,0 mm	Ladderlock	one sided
Dimensions (W x L x H)	27 x 46,5 x 13 mm		

Note: Variant for thinner or single straps is available upon request. Not suitable for the use on motorcycle helmets.

Material / Colour		**Other Features**	
Material	PA6 / 66	Weight	15,00 g
Colour	black	Static Breaking Load	75,00 kg
		Opening	lateral slide

Article Number: F7030

SNAP helmet buckle 15 shaped durethan Fidlock

Technical Data

Strap width	15,0 mm	Ladderlock	one sided
Dimensions (W x L x H)	47,0 x 28,0 x 13,0 mm		

Note: Not suitable for the use on motorcycle helmets.

Material / Colour		**Other Features**	
Material	PA66-GF	Weight	12,00 g
Colour	black	Static Breaking Load	65,00 kg
		Opening	lateral slide

This version of the fastener combines the reliable properties of the SNAP helmet buckle 15 with a new design. With a static breaking load of up to 65 kg, this buckle is specifically for thin, 15 mm wide, single straps. The SNAP helmet buckles feature our Fidlock logo.

Article Number: F7031

SNAP helmet buckle 15 shaped grivory Fidlock

Technical Data

Strap width	15,0 mm	Ladderlock	one sided
Dimensions (W x L x H)	47,0 x 28,0 x 13,0 mm		

Note: Variant for thinner or single straps. Not suitable for the use on motorcycle helmets.

Material / Colour		**Other Features**	
Material	PA6 / 66	Weight	12,00 g
Colour	black	Static Breaking Load	75,00 kg
		Opening	lateral slide

This helmet buckle has all the features of the tried-and-tested buckles, combining it with a new design. This variant is especially for thinner or single straps of 15 mm width and offers a static breaking load of 75 kg. The SNAP helmet buckles feature our Fidlock logo.

Fixing, changing and adjusting - the fastener solution for a maximum of flexibility

With the SNAP push series, Fidlock offers an easy-to-use snap fastener which can be opened comfortably yet securely – with just a fingertip. In line with the Fidlock concept, it includes an automatic closing mechanism, providing easy single-handed operation. The reliable SNAP push also triumphs with a maximum of flexibility and is optimally suited for a variety of purposes, depending of the implementation of the fastener on the product: for carrier bags, rucksacks or even school bags. A simple "push" of the button to release, a snap to close or attach and incredibly versatile possibilities guarantee Function + Fun. The fasteners are available in different sizes and stability classes (sizes: S, M, L), including a lightweight of only 7,6 g. The SNAP push products can be individually configured or adapted to individual brands or product designs.

male/female - flexible fastener solutions

The SNAP push product family consists of female parts (1) of a complete set. They are paired with compatible male counterparts (2), belonging to the SNAP series. Product designers are provided with the appropriate versions and fittings for different materials and material thicknesses. Please note the information provided in the technical details when customizing an individual fastener.

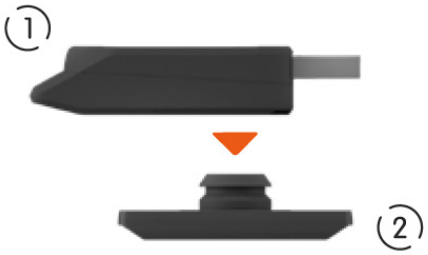

Article Number: 05108

SNAP push female S 15 SB

S M L

Technical Data

For strap width	15,0 mm	Ladderlock	none
Dimensions (W x L x H)	21,2 x 52,5 x 11,1 mm		

Note: The SNAP push female S 15 SB is compatible with the SNAP male S. Ladderlock version available (05104). Not suitable for safety-related applications.

Material / Colour		**Other Features**	
Material	PA66-GF	Weight	7,00 g
Colour	black	Static Breaking Load	15,00 kg
		Opening	push

The SNAP push female S 15 is distinguishable to the other SNAP push female products by its single bar (SB) belt strap threading and fixing for a strap width of 15 mm. This allows it to be tightly fitted onto webbing.

SNAP push female S 15 LL

Article Number: 05104

S M L

The SNAP push 15 LL with belt strap threading and fixing is the small and innovative snap fastener variant in the SNAP push product family. Designed for 15 mm straps, the ladderlock (LL) offers high convenience in terms of adjusting, aligning and securing, for example on hip bags or children's rucksacks.

Technical Data

Strap width	15,0 mm	Ladderlock	one sided
Dimensions (W x L x H)	21,2 x 58 x 11,1 mm		

Note: The female parts are freely rotatable. Not suitable for safety-related applications.

Material / Colour		**Other Features**	
Material	PA66-GF	Weight	7,20 g
Colour	black	Static Breaking Load	2,00 kg
		Opening	push

SNAP push female S 20 LL

Article Number: 06040

S M L

It was designed for 20 mm wide straps and, due to its size S, suitable for low load capacities. The combination with other buckles can create a streamlined design. Due to the ladderlock (LL), it offers highest convenience in terms of adjusting, aligning and securing – depending on the implementation of the fastener on the product, e.g. on hip bags or children's rucksacks.

Technical Data

Strap width	20,0 mm	Ladderlock	one sided
Dimensions (W x L x H)	26 x 64,5 x 11 mm		

Note: The SNAP push female S 20 is compatible with the SNAP male S series. Not suitable for safety-related applications.

Material / Colour		**Other Features**	
Material	PA66-GF	Weight	11,00 g
Colour	black	Static Breaking Load	2,00 kg
		Opening	push

SNAP push female M 25 LL

Article Number: 05120

S M L

This is a compact and rounded version of the SNAP push female L 25 LL, suitable for combination to create a streamlined design. The M fastener bears average load capacities and was designed for 25 mm wide straps. The ladderlock (LL) offers highest possible convenience in terms of adjusting, aligning and securing – depending on the implementation of the fastener on the product, e.g. on hip bags or children's rucksacks.

Technical Data

Strap width	25,0 mm	Ladderlock	one sided
Dimensions (W x L x H)	30,5 x 65 x 12,2 mm		

Note: The SNAP push female M 25 LL is compatible with the SNAP male M and SNAP male M Bolt. Not suitable for safety-related applications.

Material / Colour		**Other Features**	
Material	PA66-GF	Weight	12,50 g
Colour	black	Static Breaking Load	15,00 kg
		Opening	push

Article Number: 05005

SNAP push female L 25 LL

S M L

Technical Data

Strap width	25,0 mm	Ladderlock	one sided
Dimensions (W x L x H)	32 x 78 x 16 mm		

Note: The SNAP push female L 25 LL is compatible with the SNAP male L and SNAP male L bolt series. Not suitable for safety-related applications.

Material / Colour		**Other Features**	
Material	PA66-GF	Weight	17,80 g
Colour	black /grey	Static Breaking Load	30,00 kg
		Opening	push

SNAP push female L 25 LL was designed for 25 mm wide straps and bears average load capacities. Due to the ladderlock (LL), it offers the highest possible convenience in terms of adjusting, aligning and securing – depending on the implementation of the fastener on the product, e.g. on hip bags or children's rucksacks.

Note: All female SNAP push fasteners need a male fastener part. Should you need help with the combinations, please contact our sales team. You can identify the SNAP male fastener part you need by the size marking (S, M, L).

One fastener: pull by pull - convenient, safe and invisible

The SNAP pull series combines all assets of the innovative Fidlock concept with an "invisible look". A quick pull is enough to open the fastener. Thanks to the magnets, it then closes automatically and securely clicks into place. This single-handed operation is accompanied by the concealed mounting of the SNAP pull, generating great benefits for customers. Products don't only gain value but also great freedom in their design - e.g. on bags and school bags with an invisible, high-performance fastener on the bag flap. By attaching a logo plate, the SNAP pull can be easily riveted to the rear side. As with most Fidlock fasteners, customisation possibilities are available to suit the design requirements and thereby match the customers' brand.

male/female - flexible fastener solutions

The SNAP pull products family consists of female parts (2), which can be combined with almost any male part (1) in the SNAP product family. The variations allow for great flexibility in design and processing. This makes riveted fastener solutions available for various materials and material thicknesses. When configuring your fastener, please observe the notes in the technical data.

Article Number: 05017

SNAP pull female S 20

S M L

Technical Data

For strap width	20,0 mm	Ladderlock	none
Dimensions (W x L x H)	53 x 47 x 11 mm		

Note: The SNAP pull female S 20 is compatible with the SNAP male S series. Not suitable for safety-related applications.

Material / Colour		**Other Features**	
Material	PA66-GF	Weight	11,00 g
Colour	black	Static Breaking Load	2,00 kg
Fitting	Rivet / Screw	Opening	pull

Pull, not push - the SNAP pull female s 20 is the smallest version of the SNAP pull products and compatible with the SNAP male S series. The fastener can be riveted "invisibly" on the reverse side of the bag flap or against a logo plate. It is suitable for up to 20,00 mm wide belt straps and low load capacities.

SNAP pull female M 20

Article Number: 05110

Ⓢ Ⓜ Ⓛ

Pull, not push – this variant of the SNAP pull is compatible with all SNAP male M counterparts. It can be riveted "invisibly" on the rear side of a bag flap or logo plate and is suitable for 20,00 mm wide belt straps.

Technical Data

Strap width	20,0 mm	Ladderlock	none
Dimensions (W x L x H)	61,5 x 48,3 x 11,8 mm		

Note: The SNAP pull female M 20 is compatible with all SNAP male M and SNAP male M bolt. Not suitable for safety-related applications.

Material / Colour		**Other Features**	
Material	PA66-GF	Weight	11,00 g
Colour	black	Static Breaking Load	15,00 kg
Fitting	Rivet / Screw	Opening	pull

SNAP pull female L 25

Article Number: 05180

Ⓢ Ⓜ Ⓛ

Pull, not push – the SNAP pull female L 25 is the largest component in the SNAP pull series and can be riveted "invisibly" on the reverse side of a bag flap or logo plate. It was designed for high load capacities and belt straps with a width of up to 25, 00 mm. Compatible counterparts are the SNAP male L fasteners.

Technical Data

Strap width	25,0 mm	Ladderlock	none
Dimensions (W x L x H)	49,4 x 65,2 x 16,1 mm		

Note: The SNAP pull female L is compatible will the SNAP male L and SNAP male L bolt series. Not suitable for safety-related applications.

Material / Colour		**Other Features**	
Material	PA66-GF / POM / SS	Weight	37,00 g
Colour	black	Static Breaking Load	30,00 kg
Fitting	Rivet / Screw	Opening	pull

Note: All female SNAP pull fasteners need a male fastener part. Should you need help with your combinations, please contact our sales team. You can identify the SNAP male fastener part you need by the size markings (S, M, L).

Maximum security - even at high loads

The HOOK product family is designed for fastening applications which are subject to particularly high loads, such as the HOOK 25 alu motorbike for motorcycle helmets. The conjunction of fibre-glass reinforced materials with an aluminium hook (may vary) allow the HOOK to withstand tensile forces of up to 200 kg. This ensures that the fastener will not disengage unintentionally – even under extreme loads. Variants are available for applications with lower tensile forces, as well as slimmer versions for watch or bag fasteners, depending on the implementation of the fastener on the product. The HOOK family represents a brand new, patented product family and principle. The fastener is engaged by moving the male part (upper part), with the (metal) buckle, towards the female part (bottom part). Once in position, both elements attract each other and lock magnetically, securely engaging in the grooving. Opening the fastener is just as effortless - even with gloves: simply tilt it forwards or pull the strap on the HOOK 25 alu motorbike. The HOOK product family holds fasteners for strap widths of 15 to 40 mm and ranges from significantly light and slim models to the HOOK 25 alu motorbike and the HOOK 25 reverse, a fastener which can be flexibly engaged on either side.

Article Number: 01202

HOOK 15 helmet buckle

Technical Data

For strap width	15,0 mm	Length	45,8 mm
Dimensions (W x L x H)	23 x 32,2 x 11,9 mm	D-Ring	short 18,6 mm

Note: The moving bar on the D-ring enables adjustment of the strap and is available in different lengths. Not suitable for the use on motorcycle helmets.

Material / Colour		**Other Features**	
Material male	Stainless Steel D-ring PA66-GF body, PA6 glidebar	Weight	10,00 g
Material female	PA, 40% grivory	Static Breaking Load	50,00 kg
Colour	black	Opening	lift

The HOOK 15 helmet buckle is designed for helmets that need smaller, yet resilient buckles. The fitted shape of the female part (bottom part) and the rounded male part (upper part) generate compact overall dimensions. To open the fastener, simply tilt the top part upwards with two fingers.

HOOK 15 helmet buckle long D-ring

Article Number: 01215

The HOOK 15 helmet buckle is designed for helmets that need smaller, yet resilient buckles. Thie long D-ring enables adjustment of the strap. The fitted shape of the female bottom part and the rounded male upper part generate compact overall dimensions. To open the fastener, simply tilt the top part upwards with two fingers.

Technical Data

Strap width	15,0 mm	Length	54,2 mm
Dimensions (W x L x H)	23 x 32,2 x 11,9 mm	D-Ring	long 27,0 mm

Note: D-ring available in different lengths. Not suitable for the use on motorcycle helmets.

Material / Colour		**Other Features**	
Material male	Stainless Steel D-ring PA66-GF body, PA6 glidebar	Weight	10,00 g
Material female	PA 40% grivory	Static Breaking Load	50,00 kg
Colour	black	Opening	pull

HOOK 15 helmet buckle pull tab

Article Number: 01239

The HOOK 15 helmet buckle pull tab has the same features as the HOOK 15 helmet buckle long D-ring. However, the additional pull tab facilitates even easier opening.

Technical Data

Strap width	15,0 mm	Length	45,8 mm
Dimensions (W x L x H)	23 x 32,2 x 11,9 mm	D-Ring	short 18,6 mm

Note: Pull tab is included in the scope of delivery. D-ring available in different lengths. Not suitable for the use on motorcycle helmets.

Material / Colour		**Other Features**	
Material male	Stainless Steel D-ring PA66-GF body, PA6 glidebar	Weight	10,60 g
Material female	PA 40% grivory	Static Breaking Load	50,00 kg
Colour	black	Opening	pull

HOOK 15 FW sewable

Article Number: 01266

This version of the HOOK 15 is distinguishable by its sewing strip, enabling easy attachment directly into or onto the material. Featuring a pull tab and a D-ring and depending on the implementation of the fastener on the product, it suits many application options – although it was designed specifically for the use on footwear.

Technical Data

Strap width	15,0 mm	Length	45,8 mm
Dimensions (W x L x H)	27,8 x 45,9 x 12,4 mm		

Note: Pull tab is included in the scope of delivery. Male part can be sewn into materials. Not suitable for safety-related applications.

Material / Colour		**Other Features**	
Material male	Stainless Steel D-ring PA66-GF body, PA6 glidebar	Weight	9,50 g
Material female	PA6	Static Breaking Load	n.A
Colour	black	Opening	pull

HOOK 20 helmet buckle

Article Number: 01208

Technical Data

Strap width	20,0 mm	Length	57,8 mm
Dimensions (W x L x H)	28 x 44,3 x 14 mm		

Note: Pulltab is included in the scope of delivery. Not suitable for safety-related applications.

Material / Colour		**Other Features**	
Material male	Stainless Steel, PA6	Weight	12,90 g
Material female	PA6	Static Breaking Load	50,00 kg
Colour	black	Opening	pull
Fitting	strap, ladderlock		

The HOOK 20 helmet buckle is based on the proven technology of the motorbike helmet fastener HOOK 25 alu motorbike. This slightly smaller version for 20 mm wide straps is ideally suited for the application on a bicycle helmet and other sports helmets.

HOOK 20 flat

Article Number: 01211

Technical Data

Strap width	20,0 mm	Length	44,7 mm
Dimensions (W x L x H)	26,8 x 43,5 x 10,4 mm		

Note: Not suitable for safety-related applications.

Material / Colour		**Other Features**	
Material	PA66-GF	Weight	7,00 g
Colour	black	Static Breaking Load	15,00 kg
		Opening	lift

The HOOK flat boasts with an extremely low fastener height of 8,3 mm. The integrated magnets and a hook with an incredibly slim profile make the fastener ideal for applications that require flat fasteners, such as sports watches, clothing and other textile products.

HOOK 20 flat sewable

Article Number: 01229

Technical Data

Strap width	20,0 mm	Length	44,7 mm
Dimensions (W x L x H)	26,8 x 43,5 x 10,4 mm		

Note: Not suitable for safety-related applications.

Material / Colour		**Other Features**	
Material	PA66-GF	Weight	17,00 g
Colour	bblack	Static Breaking Load	15,00 kg
		Opening	lift

As the sewable version of the HOOK 20 flat, this fastener also boasts with an extremely low fastener height of 8,3 mm. Additionally, it incorporates a thin nylon edge, allowing it to be sewn directly into or onto the material. The HOOK 20 flat sewable is perfectly suited for textile products.

HOOK 20 flat adjuster

Article Number: 01228

The HOOK flat boasts with an extremely low fastener height of 8,3 mm. The integrated magnets and a hook with an incredibly slim profile make the fastener particularly convenient for textiles. This variant additionally features options of adjustability.

Technical Data

Strap width	20,0 mm	Length	44,7 mm
Dimensions (W x L x H)	26,8 x 43,5 x 10,4 mm		

Note: Not suitable for safety-related applications.

Material / Colour		**Other Features**	
Material	PA66-GF	Weight	7,00 g
Colour	black	Static Breaking Load	15,00 kg
		Opening	lift

HOOK 20 rope

Article Number: 01204

The HOOK 20 rope offers the characteristic fastening properties of the robust HOOK system. It differs in its combination option with a variably adjustable elastic cord, instead of a belt strap. The adjustability makes this fastener ideal e.g. for backpacks, shoes or sportswear.

Technical Data

Strap width	20,0 mm	Elastic cord	3,0 mm
Dimensions (W x Lx H)	26,8 x 32 x 8,3 mm		

Note: Elastic cord is inhibited, depending on cord diameter. Not included in the scope of delivery. Not suitable for safety-related applications.

Material / Colour		**Other Features**	
Material	PA66-GF	Weight	9,00 g
Colour	black	Static Breaking Load	3,00 kg
		Opening	lift

HOOK 20 rope sewable

Article Number: 01226

The HOOK rope 20 offers the characteristic fastening properties of the HOOK systems with variable adjustability by using a rope. Moreover, it features a thin nylon edge, allowing it to be sewn directly into the material.

Technical Data

For Rope width	3,0 mm
Dimensions (W x Lx H)	26,8 x 32,5 x 8,6 mm

Note: Elastic cord is inhibited, depending on cord diameter. Not included in the scope of delivery. Not suitable for safety-related applications.

Material / Colour		**Other Features**	
Material	PA66-GF	Weight	6,00 g
Colour	black	Static Breaking Load	3,00 kg
		Opening	lift

Article Number: 01241

HOOK 20 rope sewable X3

Technical Data

For Rope width	3,0 mm
Dimensions (W x Lx H)	42,8 x 32,6 x 8,6 mm

Note: Elastic cord is inhibited, depending on cord diameter. Not included in the scope of delivery. Not suitable for safety-related applications.

Material / Colour		**Other Features**	
Material	PA66-GF	Weight	6,50 g
Colour	black	Static Breaking Load	3,00 kg
		Opening	lift

This version of the HOOK rope sewable can be differentiated by its nylon edges on three sides, for more secure fitting to materials. It has the same features as the HOOK 20 rope sewable, making it an ideal solution for textile application areas.

Article Number: 01227

HOOK 20 rope adjuster

Technical Data

For Rope width	3,0 mm
Dimensions (W x L x H)	26,8 x 32 x 8,3 mm

Note: Elastic cord is inhibited, depending on cord diameter. Not included in the scope of delivery. Not suitable for safety-related applications.

Material / Colour		**Other Features**	
Material	PA66-GF	Weight	9,00 g
Colour	black	Static Breaking Load	20,00 kg
		Opening	lift

The HOOK 20 rope adjuster offers variability in the double. Combining the possibilities of the HOOK 20 rope (adjustable through elastic cord), it also presents an extra bar for easy adjustment on the belt strap. This fastener is ideal for shoes or sportswear, depending on the implementation of the components on the product.

Article Number: F1650

HOOK 20 tanka sewable X3

Technical Data

For Rope width	3,0 mm
Dimensions (W x L x H)	42,8 x 32,4 x 11,6 mm

Note: Elastic cord can be inhibited and then released through the small push button. Rope not included in the scope of delivery. Not suitable for safety-related applications.

Material / Colour		**Other Features**	
Material	PA66-GF	Weight	8,00 g
Colour	black	Static Breaking Load	20,00 kg
		Opening	lift

The HOOK 20 tanka sewable X3 offers great adjustability. A sewing strip allows easy attachment of the fastener to the product. Unlike the HOOK 20 rope, the HOOK 20 tanka features a button in the centre which loosens the grip on the rope. Therefore, quick and easy adjustment of the rope length is possible. Fast tightening and simple handling make this fastener ideal for the use on e.g. shoes and textiles.

HOOK

HOOK 20 sternum strap

Article Number: 01256

new

Suitable for 20 mm wide straps, this version of the HOOK fasteners offers similar features as the SNAP buckle piping. Designed for chest straps, it can be fixed to shoulder straps with piping.

Technical Data

Strap width	20,0 mm
Dimensions (W x L x H)	33,2 x 56,9 x 15,46 mm

Note: Not suitable for safety-related applications.

Material / Colour		**Other Features**	
Material male	PA6	Weight	16,80 g
Material female	PA66-GF	Static Breaking Load	n.a
Colour	black	Opening	lift

HOOK 25 alu motorbike

Article Number: 01209

new

The HOOK 25 alu motorbike is revolutionising the conventional motorcycle helmet buckle: practical operation with one hand, thanks to the self-locking mechanism and easy opening, paired with a static breaking load of 200 kg. This ensures added safety and convenience.

Technical Data

Strap width	25,0 mm	Length	50,3 mm
Dimensions (W x L x H)	34 x 34 x 12,1 mm		

Note: The moving bar on the D-ring enables adjustment of the strap. Pulltab included. Suitable for the use on motorcycle helmets. Fulfills standards ECE-R22 and DOT.

Material / Colour		**Other Features**	
Material male	Stainless Steel D-ring PA6 body, Alu Glide bar	Weight	20,00 g
Material female	Aluminium	Static Breaking Load	200,00 kg
Colour	black	Opening	lift

HOOK 25 reverse

Article Number: 01200

The HOOK reverse stands out through its flexibility: The male (upper) part can be engaged, using either the bottom or the top side. As a result, quick and secure closure of the fastener is guaranteed, even with twisted straps.

Technical Data

For strap width	25,0 mm	Length	62,3 mm
Dimensions (W x Lx H)	33,8 x 44,4 x 12,5 mm		

Note: The moving bar on the D-ring enables adjustment of the strap. Not suitable for safety-related applications.

Material / Colour		**Other Features**	
Material male	Stainless Steel D-ring PA66-GF body	Weight	12,50 g
Material female	PA66-GF	Static Breaking Load	40,00 kg
Colour	black	Opening	lift

HOOK 25 reverse LL

Article Number: 01290

Technical Data

For strap width	25,0 mm	Length	64 mm
Dimensions (W x L x H)	36 x 59 x 12,5 mm		

Note: The moving bar on the D-ring enables adjustment of the strap. Not suitable for safety-related applications.

Material / Colour		**Other Features**	
Material male	Stainless Steel D-ring PA66-GF body	Weight	14,50 g
Material female	PA66-GF	Static Breaking Load	40,00 kg
Colour	black	Opening	lift

The HOOK 25 reverse LL features a glide bar, as well as a partition to thread and adjust the webbing. This fastener can not only be closed on both sides (twisted straps), but it also allows for adjustment of the top and the bottom part.

HOOK 25 rivet

Article Number: 01260

Technical Data

For strap width	25,0 mm	Length	40,0 mm
Dimensions (W x L x H)	47 x 30 x 11,6 mm		

Note: The moving bar on the D-ring enables adjustment of the strap. Pulltab included. Not suitable for safety-related applications.

Material / Colour		**Other Features**	
Material male	Stainless Steel D-ring PA6 body	Weight	15,50 g
Material female	PA66-GF	Static Breaking Load	50,00 kg
Colour	black	Opening	pull
Fitting	4 rivets (d=5mm) rivet head (d=10mm), strap		

The HOOK 25 rivet is tightly fitted to products with rivets. Therefore, it is ideally suited for attaching panniers, securing tarps (e.g. on boats) or as a fastener on bags, depending on the implementation of the fastener on the product.

HOOK 25 belt LL

Article Number: 01238

Technical Data

For strap width	25,0 mm
Dimensions (W x L x H)	41,4 x 48,4 x 18,2 mm

Note: Not suitable for safety-related applications.

Material / Colour		**Other Features**	
Material male	PA66-GF	Weight	20,10 g
Material female	PA66-GF	Static Breaking Load	40,00 kg
Colour	black	Opening	pull

The HOOK 25 belt LL is a quick-release solution for heavy loads and strong mechanical force. To prevent accidental opening, the fastener was designed with a special domed shape. It allows the adjustment of straps single-handedly, e.g. on bags.

HOOK belt 25 x 3

Article Number: 01216

new

The HOOK belt 25x3 offers the characteristic fastening properties of the HOOK fastener in triplicate. Three fasteners are combined to one longer Version, allowing the attachment of three straps per closure component. Possible applications are, for example, life jackets, tarpaulin connections or bag attachments.

Technical Data

Dimensions (W x L x H)	43,9 x 149,8 x 4,6 mm

Note: Not suitable for safety-related applications.

Material / Colour		**Other Features**	
Material male	PA6	Weight	57,60 g
Material female	PA66-GF	Static Breaking Load	300,00 kg
Colour	black	Opening	lift

HOOK 25 plastic

Article Number: 01249

This fastener combines the appearance of the HOOK 25 alu motorbike with a different material. The purpose of the HOOK 25 plastic is generating the same optics for users – at a fraction of the price. Therefore, using PA6 instead of aluminium, the static breaking load isn't as high.

Technical Data

Strap width	25,0 mm	Length	50,3 mm
Dimensions (W x L x H)	34 x 34 x 12,1 mm		

Note: The moving bar on the D-ring enables adjustment of the strap. Pulltab included. Not suitable for safety-related applications.

Material / Colour		**Other Features**	
Material male	Stainless Steel D-ring PA6 body	Weight	13,20 g
Material female	PA66-GF	Static Breaking Load	30,00 kg
Colour	black	Opening	lift

HOOK 40 alu

Article Number: 01218

The HOOK alu 40 was designed for high loads and straps with a width of up to 40 mm. As a result, it is the ideal solution for bags with wide straps or even as a belt buckle, depending on the implementation of the fastener on the product. It is perfectly suited for individual, laser-engraved or pad-printed logos.

Technical Data

For strap width	40,0 mm	Length	51,0 mm
Dimensions (W x Lx H)	50 x 34 x 12,1 mm		

Note: Pulltab is included in the scope of delivery. Not suitable for safety-related applications.

Material / Colour		**Other Features**	
Material male	Stainless Steel D-ring Aluminium glidebar	Weight	32,00 g
Material female	Aluminium	Static Breaking Load	200,00 kg
Colour	black	Opening	pull

HOOK 40 adjuster

Article Number: 01251

Technical Data

For strap width	40,0 mm	Length	50,0 mm
Dimensions (W x L x H)	48,0 x 44,0 x 13,6 mm		

Note: The modular injection molding tool allows the fastening geometry to be individually adjusted. Pulltab is included in the scope of delivery. Not suitbale for safety-related applications.

Material / Colour		**Other Features**	
Material male	Stainless Steel D-Ring, PA66-GF body, Alu Glidebar	Weight	29,00 g
Material female	PA66-GF	Static Breaking Load	40,00 kg
Colour	black	Opening	pull

Designed for wide straps of up to 40 mm, the HOOK 40 adjuster allows single-handed adjustment of the straps and is ideally suited for individual, laser-engraved or pad-printed logos. Depending on the implementation of the fastener on the product, it can be the perfect solution for bags or even as a belt buckle.

HOOK 40 adjuster ortho

Article Number: 01219

new

Technical Data

For strap width	40,0 mm	Length	35,5 mm
Dimensions (W x L x H)	63,3 x 35,5 x 12,1 mm		

Note: Pulltab is included in the scope of delivery. Not suitbale for safety-related applications.

Material / Colour		**Other Features**	
Material	Stainless Steel D-ring PA66-GF body, PA6	Weight	28,00 g
Colour	black	Static Breaking Load	50,00 kg
		Opening	pull

This version of the HOOK 40 adjuster offers three different slots for webbing and a D-Ring. Depending on the implementation, this fastener can be adjustable on the strap and offers many application possibilities, e.g. bags or products featuring many straps.

HOOK 40 belt

Article Number: 01235

Technical Data

For strap width	40,0 mm
Dimensions (W x L x H)	60 x 51 x 18,4 mm

Note: Male part is designed for sewing securely and has no adjustable ladderlock geometry. Not suitable for safety-related applications.

Material / Colour		**Other Features**	
Material male	PA6	Weight	35,50 g
Material female	PA66-GF	Static Breaking Load	150,00 kg
Colour	black	Opening	pull

As a quick-release solution for heavy loads and strong mechanical force, the domed shape prevents accidental opening of the fastener. This version stands out by the securely fitted male part. Thus, it can be ideal for application on overalls, outdoor equipment and bags, depending on the implementation of the fastener on the product.

HOOK 40 belt LL

Article Number: 01237

The HOOK 40 belt LL is a quick-release solution for heavy loads and strong mechanical force. It features the same domed shape as the other HOOK belt models, preventing accidental opening of the fastener. This variant of the HOOK belt 40 LL allows adjustment of the straps single-handedly.

Technical Data

For strap width	40,0 mm
Dimensions (W x L x H)	60,5 x 51,5 x 20,5 mm

Note: Not suitable for safety-related applications.

Material / Colour		**Other Features**	
Material male	PA6	Weight	34,00 g
Material female	PA66-GF	Static Breaking Load	60,00 kg
Colour	black	Opening	pull

HOOK Toggle Latch

Article Number: 01291

The HOOK Toggle Latch was specially developed for applications in the field of orthopaedics. This fastener allows the user to attach and adjust a prothesis with ease.

Technical Data

Dimensions (W x L x H)	37,44 x 106,4 x 14,60 mm

Note: Not suitable for safety-related applications.

Material / Colour		**Other Features**	
Material	POM	Weight	22,80 g
Colour	black	Static Breaking Load	45,00 kg
		Opening	lift

Self-securing:
the higher the load
the safer the buckle

The V-buckle product family was designed as a closure system for high forces, requiring added security, e.g. on baby carriers. Created with a unique design, it is self-securing: the more load is sustained by the fastener, the harder it is to open. Additionally, this design allows the V-buckle male and female parts to be combined freely, meaning the female split bar component can be used in combination with e.g. the V-buckle male 40. The fastener is opened by simply tilting the flap on top. Due to the attractive force, the magnetic fastener components link automatically and securely lock, when brought into position. Regarding the customisation of the buckle, the stainless-steel flap is available in four different finishes and can be individualised by a logo. The buckles in this section are suitable for safety-related applications, rewarding users with a peace of mind and a fastener, tailored to suit their personal needs and wishes. The use on dog collars is only permitted after intensive testing by the customer. Using the V-buckle on dog leashes is excluded.

Article Number: V-11201

V-buckle 25 + pulltab

Technical Data

For strap width	25,0 mm
Dimensions (W x L x H)	34 x 72 x 14 mm

Note: Available with or without pulltab, hole dimensions: 4 x 2 mm. Suitable for safety-related applications. The use on dog leashes is excluded. The use on dog collars only permitted after intensive testing by the customer.

Material / Colour		**Other Features**	
Material	PA66-GF, Stainless Steel	Weight	22,00 g
Colour	black	Static Breaking Load	70,00 kg
Fitting	Strap	Opening	lift

The V-buckle was developed for application areas where security is key. To specify, this version is suitable for 25 mm wide straps. The buckle is self-securing: the greater the weight bearing against it, the more force is required to open it. All V-buckle female parts fit all V-buckle male parts.

V-buckle 25 splitbar + pulltab

Article Number: V-11202

Due to the split bar, this fastener can be retrofitted – even by the end customer. As an ideal premium option, the V-buckle 25 splitbar also offers simple retrofitted assembly on the production side. All V-buckle female parts fit all V-buckle male parts.

Technical Data

For strap width	25,0 mm
Dimensions (W x L x H)	34 x 72 x 14 mm

Note: Available with or without pulltab, hole dimensions: 4x 2 mm. Suitable for safety-related applications. The use on dog leashes is excluded. The use on dog collars only permitted after intensive testing by the customer.

Material / Colour		**Other Features**	
Material	PA66-GF, Stainless Steel	Weight	22,00 g
Colour	black	Static Breaking Load	n.a.
Fitting	Strap	Opening	lift

V-buckle 40 SB + pulltab

Article Number: V-13208

The V-buckle was developed for application areas where security is key. This SB (single bar) version offers fixed attachment on 40 mm wide straps and is not adjustable. All V-buckle female parts fit all V-buckle male parts.

Technical Data

For strap width	40,0 mm
Dimensions (W x Lx H)	49,0 x 80,0 x 13,5 mm

Note: Available with or without pulltab, hole dimensions: 4x 2 mm. Suitable for safety-related applications. The use on dog leashes is excluded. The use on dog collars only permitted after intensive testing by the customer.

Material / Colour		**Other Features**	
Material	PA66-GF, Stainless Steel	Weight	25,60 g
Colour	black	Static Breaking Load	70,00 kg
Fitting	Strap	Opening	lift

V-buckle 40 LL + pulltab

Article Number: V-12207

The V-buckle was developed for application areas with safety relevance. This LL (ladderlock) version of the self-securing product family is fully adjustable and designed for 40 mm wide straps. All V-buckle female parts fit all V-Buckle male parts.

Technical Data

For strap width	40,0 mm
Dimensions (W x Lx H)	49 x 95,0 x 14,0 mm

Note: Available with or without pulltab, hole dimensions: 4x 2 mm. Suitable for safety-related applications. The use on dog leashes is excluded. The use on dog collars only permitted after intensive testing by the customer.

Material / Colour		**Other Features**	
Material	PA66-GF, Stainless Steel	Weight	29,70 g
Colour	black	Static Breaking Load	70,00 kg
Fitting	Strap	Opening	lift

Article Number: V-11401

V-buckle 25 black flap + pulltab

Technical Data

For strap width	25,0 mm
Dimensions (W x L x H)	34 x 72 x 14 mm

Note: Available with or without pulltab, hole dimensions: 4x 2 mm. Suitable for safety-related applications. The use on dog leashes is excluded. The use on dog collars only permitted after intensive testing by the customer.

Material / Colour		**Other Features**	
Material	PA66-GF, Stainless Steel	Weight	22,00 g
Colour	black	Static Breaking Load	70,00 kg
Fitting	Strap	Opening	lift

This version was designed with a black stainless steel flap. As a fastener for situations with safety relevance, the V-buckle is self-securing. It is suitable for 25 mm wide straps. All V-buckle female parts fit all V-buckle male parts.

Article Number: V-11402

V-buckle 25 splitbar black flap + pulltab

Technical Data

For strap width	25,0 mm
Dimensions (W x L x H)	34 x 72 x 14 mm

Note: Available with or without pulltab, hole dimensions: 4x 2 mm. Suitable for safety-related applications. The use on dog leashes is excluded. The use on dog collars only permitted after intensive testing by the customer.

Material / Colour		**Other Features**	
Material	PA66-GF, Stainless Steel	Weight	22,00 g
Colour	black	Static Breaking Load	n.a.
Fitting	Strap	Opening	lift

Due to the split bar, this fastener can be retrofitted – even by the end customer. This version of the V-buckle splitbar was designed with a black stainless steel flap and also offers simple retrofitted assembly on the production side. All V-buckle female parts fit all V-Buckle male parts.

Article Number: V-13408

V-buckle 40 SB black flap + pulltab

Technical Data

For strap width	40,0 mm
Dimensions (W x Lx H)	49,0 x 80,0 x 13,5 mm

Note: Available with or without pulltab, hole dimensions: 4x 2 mm. Suitable for safety-related applications. The use on dog leashes is excluded. The use on dog collars only permitted after intensive testing by the customer.

Material / Colour		**Other Features**	
Material	PA66-GF, Stainless Steel	Weight	25,60 g
Colour	black	Static Breaking Load	70,00 kg
Fitting	Strap	Opening	lift

Combining the single bar option with a black stainless steel flap, the V-buckle 40 SB offers fixed attachment and no adjustability. This buckle is self-securing and suitable for 40 mm wide straps. All V-buckle female parts fit all V-buckle male parts.

V-buckle 40 LL black flap + pulltab

Article Number: V-12407

Offering full adjustability, this version of the V-buckle is distinguishable by its black stainless steel flap. The V-buckle 40 LL black flap was developed for safety-related applications, making it self-securing and suitable for 40 mm wide straps. All V-buckle female parts fit all V-buckle male parts.

Technical Data

For strap width	40,0 mm
Dimensions (W x Lx H)	49 x 95,0 x 14,0 mm

Note: Available with or without pulltab, hole dimensions: 4x 2 mm. Suitable for safety-related applications. The use on dog leashes is excluded. The use on dog collars only permitted after intensive testing by the customer.

Material / Colour		**Other Features**	
Material	PA66-GF, Stainless Steel	Weight	29,70 g
Colour	black	Static Breaking Load	70,00 kg
Fitting	Strap	Opening	lift

V-buckle 25 swivel mount + pulltab

Article Number: V-11209

The V-buckle swivel mount is based on the design of the regular V-Buckle 25. However, it is attached with webbing on one side of the fastener and with a screw on the other. All V-buckle female parts fit all V-buckle male parts.

Technical Data

For strap width	25,0 mm
Dimensions (W x Lx H)	34,0 x 73,0 x 14,0 mm

Note: Available with or without pulltab, hole dimensions: 4x 2 mm. Suitable for safety-related applications. The use on dog leashes is excluded. The use on dog collars only permitted after intensive testing by the customer.

Material / Colour		**Other Features**	
Material	PA66-GF, Stainless Steel	Weight	26,00 g
Colour	black	Static Breaking Load	70,00 kg
Fitting	Strap + Screw	Opening	lift

V-buckle 25 swivel mount black flap + pulltab

Article Number: V-11409

The V-buckle swivel mount is attached with webbing on one side of the fastener and with a screw on the other. This version features a black stainless steel flap. All V-buckle female parts fit all V-buckle male parts.

Technical Data

For strap width	25,0 mm
Dimensions (W x Lx H)	34,0 x 73,0 x 14,0 mm

Note: Available with or without pulltab, hole dimensions: 4x 2 mm. Suitable for safety-related applications. The use on dog leashes is excluded. The use on dog collars only permitted after intensive testing by the customer.

Material / Colour		**Other Features**	
Material	PA66-GF, Stainless Steel	Weight	26,00 g
Colour	black	Static Breaking Load	70,00 kg
Fitting	Strap + Screw	Opening	lift

Article Number: V-14210

V-buckle 20 + pulltab

Technical Data

For strap width	20,0 mm
Dimensions (W x Lx H)	34,0 x 74,0 x 14,0 mm

Note: Available with or without pulltab, hole dimensions: 4x 2 mm. Not suitable for safety related applications.

Material / Colour		**Other Features**	
Material	PA66-GF, Stainless Steel	Weight	25,00 g
Colour	black	Static Breaking Load	70,00 kg
Fitting	Strap	Opening	lift

This slender version of the V-buckle was specifically developed for 20 mm wide straps. However, the equally self-securing 20 female and male parts continue to fit the other V-buckle counterparts.

Article Number: V-14410

V-buckle 20 black flap + pulltab

Technical Data

For strap width	20,0 mm
Dimensions (W x Lx H)	34,0 x 74,0 x 14,0 mm

Note: Available with or without pulltab, hole dimensions: 4x 2 mm. Not suitable for safety related applications.

Material / Colour		**Other Features**	
Material	PA66-GF, Stainless Steel	Weight	25,00 g
Colour	black	Static Breaking Load	70,00 kg
Fitting	Strap	Opening	lift

This slender version of the V-buckle features a black stainless steel flap and was developed for 20 mm wide straps. However, the equally self-securing 20 black flap female and male parts continue to fit the other V-buckle counterparts.

A Revolution in fastening Systems

The Fidlock Stripe products are revolutionary fasteners which were developed especially for textile applications. Small, slim and particularly quiet: a predestined alternative to regular hook-and-loop fasteners. This basic principle evolved into multiple product variants, e.g. for caps or even shoes. Sewn or welded into materials, the Stripe can be attached to your products almost invisibly. These fasteners may be small - but the impression they make is great.

Article Number: 01310

Stripe X3

Technical Data

Dimensions: (W x L x H)	30,0 x 54,0 x 5,4 mm

Note: This fastener can be sewn behind or on top of materials. It can also be glued or welded, depending on the material. Not suitable for safety-related applications.

Material / Colour

Material	PA6
Colour	black

Other Features

Weight	8,00 g
Static Breaking Load	n.a
Opening	lift

The Stripe X3 is a brand-new system, developed specifically for textiles. Its slim design and versatile attachment make it perfect to use on jacket collars, sleeves, trousers and even shoes.

Stripe X3 Flex

Article Number: 01312

The Stripe X3 Flex is the flexible version of the Stripe X3. This fastener, which is made from TPU, can be used for all the same textile applications as the regular Stripe X3. Easily bending to fit any curve, this version comes with a great bonus.

Technical Data

Dimensions: (W x L x H)	30,0 x 54,0 x 5,4 mm

Note: This fastener can be sewn behind or on top of materials. It can also be glued or welded, depending on the material. Not suitable for safety-related applications.

Material / Colour		**Other Features**	
Material	TPU	Weight	8,00 g
Colour	black	Static Breaking Load	n.a
		Opening	lift

Stripe Slim X5

Article Number: 01341

The Stripe Slim X5 is a slimmer version of the Stripe X3. It additionally offers more levels for adjustment, making it ideal for caps, trousers, jackets or collars.

Technical Data

Dimensions: (W x L x H)	101,0 x 135,0 x 6,7 mm

Note: This fastener can be sewn behind or on top of materials. It can also be glued or welded, depending on the material. Not suitable for safety-related applications.

Material / Colour		**Other Features**	
Material	PA6	Weight	12,20 g
Colour	black	Static Breaking Load	n.a
		Opening	lift

Stripe FW SB 20

Article Number: 01370

This fastener stands out through its mode of attachment: while the male part is sewn or welded onto or into the material, the female part is fixed to the webbing. The Stripe FW SB 20 is the ideal fastener for shoes.

Technical Data

Dimensions: (W x L x H)	30,9 x 31,2 x 8,0 mm

Note: The male part of this fastener can be sewn behind or on top of materials, it can also be glued or welded depending on the material. Not suitable for safety-related applications.

Material / Colour		**Other Features**	
Material	PA6	Weight	6,70 g
Colour	black	Static Breaking Load	n.a
		Opening	lift

Stripe FW DR 20

Article Number: 01371

Technical Data

Dimensions: (W x L x H) 44,0 x 31,2 x 8,0 mm

Note: The male part of this fastener can be sewn behind or on top of materials. It can also be glued or welded, depending on the material. The D-ring and Ladderlock allows adjustment. Not suitbale for safety-related applications.

Material / Colour		**Other Features**	
Material	PA6, Stainless Steel	Weight	9,10 g
Colour	black	Static Breaking Load	n.a
		Opening	lift

This variant of the Stripe product family is very similar to the Stripe FW SB 20. It is distinguishable by the additional D-ring on the female part, allowing adjustment of the fastener on the webbing. The male part can be sewn or welded onto or into materials. This fastener is ideal for shoes.

Stripe X1 underlay

Article Number: 01362

Technical Data

Dimensions: (W x L x H) 30,0 x 35,0 x 7,5 mm

Note: This Stripe is designed to be sewn under material.

Material / Colour		**Other Features**	
Material	PA6	Weight	6,40 g
Colour	black	Static Breaking Load	n.a
		Opening	lift

This smaller version of the classic Stripe X3 fastener only has one level of adjustment. It was designed to be sewn under the material.

Stripe X1 overlay

Article Number: 01363

Technical Data

Dimensions: (W x L x H) 30,0 x 32,3 x 5,8 mm

Note: This Stripe is designed to be sewn onto material.

Material / Colour		**Other Features**	
Material	PA6	Weight	6,00 g
Colour	black	Static Breaking Load	n.a
		Opening	lift

This smaller version of the classic Stripe X3 fastener only has one level of adjustment. It was designed to be sewn onto instead of into material.

Special fasteners for special applications

Fidlock Specials are fastening solutions which provide new opportunities due to their unique properties. A great example is the revolutionary 3-point lock – the first magnetic-mechanical fastener that can serve as an easy-to-use strap system in baby buggies. Offering potential for customisation, these fasteners can meet individual requirements. Therefore, product designers have a range of innovative fasteners at their disposal. If applied correctly, these fasteners can create highly premium products with added value.

Article Number: 05170

3-point lock single action

Technical Data

For strap width	25,0 & 40,0 mm
Dimensions (W x L x H)	63,8 x 82,6 x 11,3 mm

Note: 1 x 40,0 mm strap, 2 x 20,0 or 25,0 mm strap. Not suitable for the use on childrens car seats. Does not meet Group 0 or 1 standards for child car seats.

Material / Colour		**Other Features**	
Material	PC-ABS/PA66-GF	Weight	44,00 g
Colour	black	Static Breaking Load	40,00 kg
		Opening	slide

The 3-point lock single action is the first 3-point lock with one-handed operation. It can be easily opened through lateral sliding and closes automatically, thanks to the magnets. This is an ideal option for buggies, bike seats, highchairs etc., depending on the implementation of the fastener on the product.

3-point lock double action

Article Number: 05171

The "double action" variant of the 3-point lock fulfils the safety standards for buggies and bicycle seats of the USA and Europe. To open the system, one must first push down to disengage the mechanism and then slide laterally.

Technical Data

For strap width	25,0 & 40,0 mm
Dimensions (W x L x H)	63,8 x 82,6 x 11,3 mm

Note: 1 x 40,0 mm strap, 2 x 20,0 or 25,0 mm strap. Not suitable for the use on childrens car seats. Does not meet Group 0 or 1 standards for child car seats.

Material / Colour		**Other Features**	
Material	PC-ABS/PA66-GF	Weight	44,00 g
Colour	black	Static Breaking Load	40,00 kg
		Opening	push & slide

5-point lock single action

Article Number: 05175

The 5-point lock single action offers flexible application possibilities, depending on the implementation of the fastener on the product, e.g. on child carriers or bicycle trailers. The male parts of the shoulder and waist straps can be opened and closed together, or separately.

Technical Data

For strap width	25,0 mm & 40,0 mm
Dimensions female part (W x L x H)	94 x 100 x 17 mm

Note: 1 x 40,0 mm strap, 2 x 20,0 or 25,0 mm straps. The male parts for the shoulder straps and hip straps can be opened seperately. Not suitable for the use on childrens car seats. Does not meet Group 0 or 1 standards for child car seats.

Material / Colour		**Other Features**	
Material	PC-ABS / PA66-GF / PA6	Weight	60,00 g
Colour	black	Static Breaking Load	40,00 kg
		Opening	slide

5-point lock double action

Article Number: 05176

The "double action" variant of the 5-point lock fulfils the safety standards for buggies and bicycle seats of the USA and Europe. To open the system, one must first push down to disengage the mechanism and then slide laterally. The male parts of the shoulder and waist straps can be opened and closed together, or separately.

Technical Data

For strap width	25,0 mm & 40,0 mm
Dimensions female part (W x Lx H)	94 x 100 x 17 mm

Note: 1 x 40,0 mm strap, 2 x 20,0 or 25,0 mm straps. The male parts for the shoulder straps and hip straps can be opened seperately. Not suitable for the use on childrens car seats. Does not meet Group 0 or 1 standards for child car seats.

Material / Colour		**Other Features**	
Material	PC-ABS / PA66-GF / PA6	Weight	60,00 g
Colour	black	Static Breaking Load	40,00 kg
		Opening	push & slide

SNAP buckle flat 40 reed switch

Article Number:08027

Technical Data

For strap width	40 mm	Ladderlock	one sided
Dimensions (W x Lx H)	48,4 x 74,0 x 14 mm	Cable length	300,00 mm

Note: The plug is a Molex 39-01-2020. By opening the buckle you close the circuit, by closing it you deactivate the circuit. No logo print possible. Not suitable for safety-related applications.

Material / Colour

Material	PA66-GF
Colour	black

Other Features

Weight	30,00 g
Static Breaking Load	40,00 kg
Opening	lateral slide

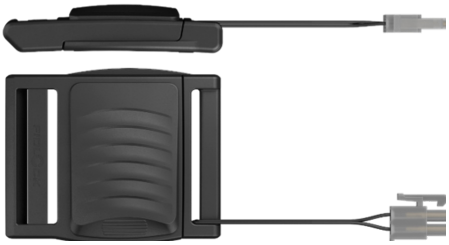

This buckle has an integrated reed switch which allows you to activate and deactivate the circuit within. Therefore, this fastener is ideally suited as a component for anti-theft devices or to activate and deactivate electronic components on the application, depending on the implementation of the fastener on the product.

SNAP stackable S

Article Number: 09210

new

Technical Data

Diameter	28,0 mm	Total Height	5,2 mm

Note: Connect both parts by pressing, must be stiched to material. Not suitable for safety related applications.

Material / Colour

Material: PP

Colour: black

Other Features

Weight:	1,5 g
Static Breaking Load:	n.a
Opening:	lift

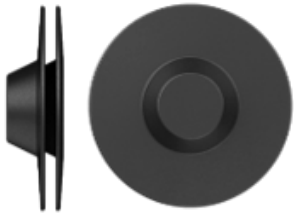

The SNAP stackable S serves as its own counterpart and can be stacked on top of each other, almost infinitely. When the force on the fastener exceeds its capacity, the fastener will open without breaking. Its features and the double-sided fastening properties are ideal for children's products, such as bibs or reversible jackets. It comes in three sizes (S, M, L,).

SNAP stackable M

Article Number: 09211

new

Technical Data

Diameter	31,0 mm	Total Height	5,2 mm

Note: Connect both parts by pressing, must be stiched to material. Not suitable for safety related applications.

Material / Colour

Material: PP

Colour: black

Other Features

Weight:	2,5 g
Static Breaking Load:	n.a
Opening:	lift

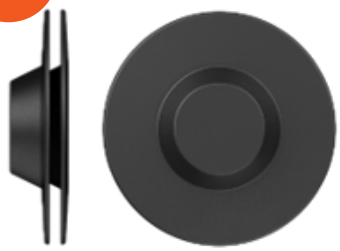

The SNAP stackable M serves as its own counterpart and can be stacked on top of each other, almost infinitely. When the force on the fastener exceeds its capacity, the fastener will open without breaking. Its features and the double-sided fastening properties are ideal for children's products, such as bibs or reversible jackets. It comes in three sizes (S, M, L,).

SNAP stackable L

Article Number: 09212

new

The SNAP stackable L serves as its own counterpart and can be stacked on top of each other, almost infinitely. When the force on the fastener exceeds its capacity, the fastener will open without breaking. Its features and the double-sided fastening properties are ideal for children's products, such as bibs or reversible jackets. It comes in three sizes (S, M, L,).

Technical Data

Diameter	36,0 mm	Total Height	5,3 mm

Note: Connect both parts by pressing, must be stiched to material. Not suitable for safety related applications.

Material / Colour

Material: PP

Colour: black

Other Features

Weight:	4,0 g
Static Breaking Load:	n.a
Opening:	lift

Winch Momentum

Article Number: 01500-R

new

The WINCH momentum combines the properties of a ratchet and a fastener. Depending on the width of the laces, one or multiple laces can be used simultaneously. Although primarily designed for shoes, it can be opened completely and, therefore, offers more application areas such as tightening a helmet to a backpack or on prostheses and orthoses. A left-turning version is available (article number: 01500-L).

Technical Data

Diameter	32,8 mm	Total Height	16,8 mm

Note: Also available in a left turning version (01500-L). Parts are available seperately. Not suitable for safety related applications.

Material / Colour

Material: PA6, PA6 GF15

Colour: black

Rope diameter: 1,2 -2,75 mm

Other Features

Weight:	12,9 g
Static Breaking Load:	20,0 kg
Opening:	turn

Winch Elegance

Article Number: 01510-R

new

The WINCH elegance combines the properties of a ratchet and a fastener and features an additional pull-tab with a soft-touch surface for easy handling. Depending on the width of the laces, one or multiple laces can be used simultaneously. Although primarily designed for shoes, it can be opened completely and, therefore, offers more application areas such as tightening a helmet to a backpack or on prostheses and orthoses. A left-turning version is available (article number: 01510-L).

Technical Data

Diameter	34,0 mm	Total Height	16,8 mm

Note: Also available in a left turning version (01510-L). Parts are available seperately. Not suitable for safety related applications.

Material / Colour

Material: PA6, PA6GF15, TPU

Colour: black

Rope diameter: 1,2 - 2,75 mm

Other Features

Weight:	13,5 g
Static Breaking Load:	20,0 kg
Opening:	turn

Fastening systems developed by cyclists for cyclists

Fidlock offers many different, sophisticated fastening solutions for the field of cycling. Whether it be to attach a bottle, a small pouch and a phone to your bike, or even to fix a helmet to your backpack – you name it, Fidlock has a fastener for you! This category features all the products Fidlock has developed for the modern-day cyclist.

Article Number: 09180

Screw bike adapter

Technical Data

Tube Diameter	22,0 - 26,0 mm
Dimensions female part (W x L x H)	49 x 45,8 x 20 mm

Material / Colour		**Other Features**	
Material	POM, PA6, Stainless Steel	Weight	46,00 g
Colour	black	Static Breaking Load	45,00 kg
		Opening	turn

The screw bike adapter is the reliable fastening system to securely attach accessories to a bike while being able to access them easily. Whether it is a navigation system, a smartphone, an action cam or a GPS tracker: this system has a tight grip on the handlebar or the middle bar.

SNAP push L saddle adapter

Article Number: 09170

This fastening system is ideally suited to attach a saddlebag or other bike accessories firmly under the saddle. The quick-release solution offers easy access, yet securely fixing them to the bike. The fastener can be opened with one simple "push".

Technical Data

Dimensions female part (W x L x H)	58,4 x 89,5 x 17,3 mm

Note: Fits all standard saddle guide rails.

Material / Colour		**Other Features**	
Material	POM, PA66-GF, Stainless Steel	Weight	47,80 g
Colour	black	Static Breaking Load	40,00 kg
		Opening	push

TWIST tex base

Article Number: 09605

The TWIST tex base is used in combination with a TWIST connector and ideally suited to attach pouches and/or bags to webbing, PALS straps (molle system) or backpacks.

Technical Data

Dimensions (W x L x H)	32 x 112 x 11,3 mm

Note: The TWIST tex base needs to be comvines with a female part (Twist tex connector, uni connec tor).

Material / Colour		**Other Features**	
Material	PA66-GF	Weight	29,00 g
Colour	black	Static Breaking Load	n/a
		Opening	twist

TWIST uni base

Article Number: 09620

The TWIST uni base is an alternative to the regular bottle TWIST base which doesn't need to be attached by screws. To allow the use on any frame, regardless of whether the frame has holes for a bottle cage, the uni base features rubber cable ties.

Technical Data

Dimensions Base (W x L x H)	24,6 x 88,5 x 19,3 mm
Dimensions Cable Ties (W x L)	11,0 x 34,0 mm

Material / Colour		**Other Features**	
Material Base	PA66	Weight	44,00 g
Material Cable Ties	TPU	Static Breaking Load	n/a
		Opening	twist

TWIST tex connector

Article Number: 09606

Technical Data

Dimensions (W x L x H)	36 x 99,5 x 14,9 mm

Note: The TWIST tex connector needs to be used in ombination with a male part (TWIST tex base, uni base or bike base.

Material / Colour		**Other Features**	
Material	PA66-GF	Weight	44,20 g
Colour	black	Static Breaking Load	n/a
		Opening	twist

The TWIST tex connector can be used in combination with a TWIST base to attach pouches and/or bags to a bicycle or another backpack or bag.

TWIST uni connector

Article Number: 09622

Technical Data

Dimensions (W x L x H)	63,0 x 32,0 x 104,0 mm	For diameter	80mm

Note: The TWIST uni connector needs a male part (Uni base, tex base or bike base).

Material / Colour		**Other Features**	
Material	PA66-GF, Stainless Steel	Weight	54,00 g
Colour	black	Static Breaking Load	n/a
		Opening	twist

The TWIST uni connector can be used in combination with a TWIST base. It can be used flexibly, attaching a bottle or other accessories to a bike.

TWIST belt for bottle

Article Number: 09619

new

Technical Data

Dimensions (W x L x H)	68,0 x 81,0 x 208,0 mm

Note: Screw not included in scope of delivery. Any use of the belt for TWIST bottle must be approved by FIDLOCK. Only works in combination with the connector for belt (09618).

Material / Colour		**Other Features**	
Material	PA66-GF	Weight	590,00 g
Colour	black	Static Breaking Load	n/a

With TWIST belt only FIDLOCK makes it possible for interested brands or bottle manufacturers can acquire the necessary TWIST parts, i.e. the TWIST belt only connector, the TWIST belt only belt as well as the TWIST bike base but are free to design the bottle in a unique and customized way.

TWIST bottle connector for belt

Article Number: 09618

new

With TWIST belt only FIDLOCK makes it possible for interested brands or bottle manufacturers can acquire the necessary TWIST parts, i.e. the TWIST belt only connector, the TWIST belt only belt as well as the TWIST bike base but are free to design the bottle in a unique and customized way.

Technical Data

Dimensions (W x L x H)	68,0 x 81,0 x 208,0 mm

Note: Screw not included in scope of delivery. Any use of the belt for TWIST bottle must be approved by FIDLOCK. Only works in combination with the belt (09619).

Material / Colour		**Other Features**	
Material	PA66-GF	Weight	n.a
Colour	black	Static Breaking Load	n/a

Note: The name TWIST must be used on all packaging and promotion materials for TWIST products.

Notes

Snap-in mounting foot sizes Ⓢ Ⓜ Ⓛ

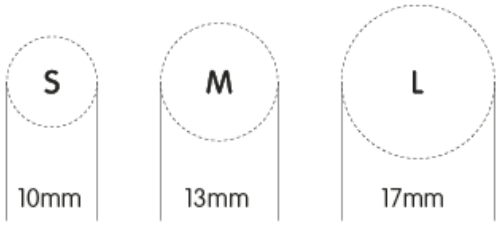

SNAP buckle piping - Fixating the webbing with rubber O-ring

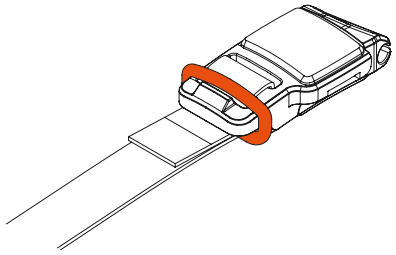

Disclaimer

The manufacturer of the end products in which Fidlock fasteners are used, bears the responsibility for thoroughly testing that the Fidlock products are suitable for the intended applications. Fidlock assumes no responsibility for damage caused by misuse, modification or repairs. All ultimate load specifications in sales catalogues are voluntary, non-binding specifications and cannot replace the test conducted by the end product manufacturer in which the manufacturer tests the adequacy of the Fidlock products for their intended application. The load capacities apply to freshly produced, black products. Load capacities may vary depending on age and colour. Unless otherwise specified, the products will be sold in their original colour (black).

Patents

All product families and the product belonging to them are protected by various patents and patent applications worldwide.

Fidlock is a registered trademark. Mistakes, misprints and technical changes reserved. Colours may deviate from the originals due to the printing process.

FIDLOCK®

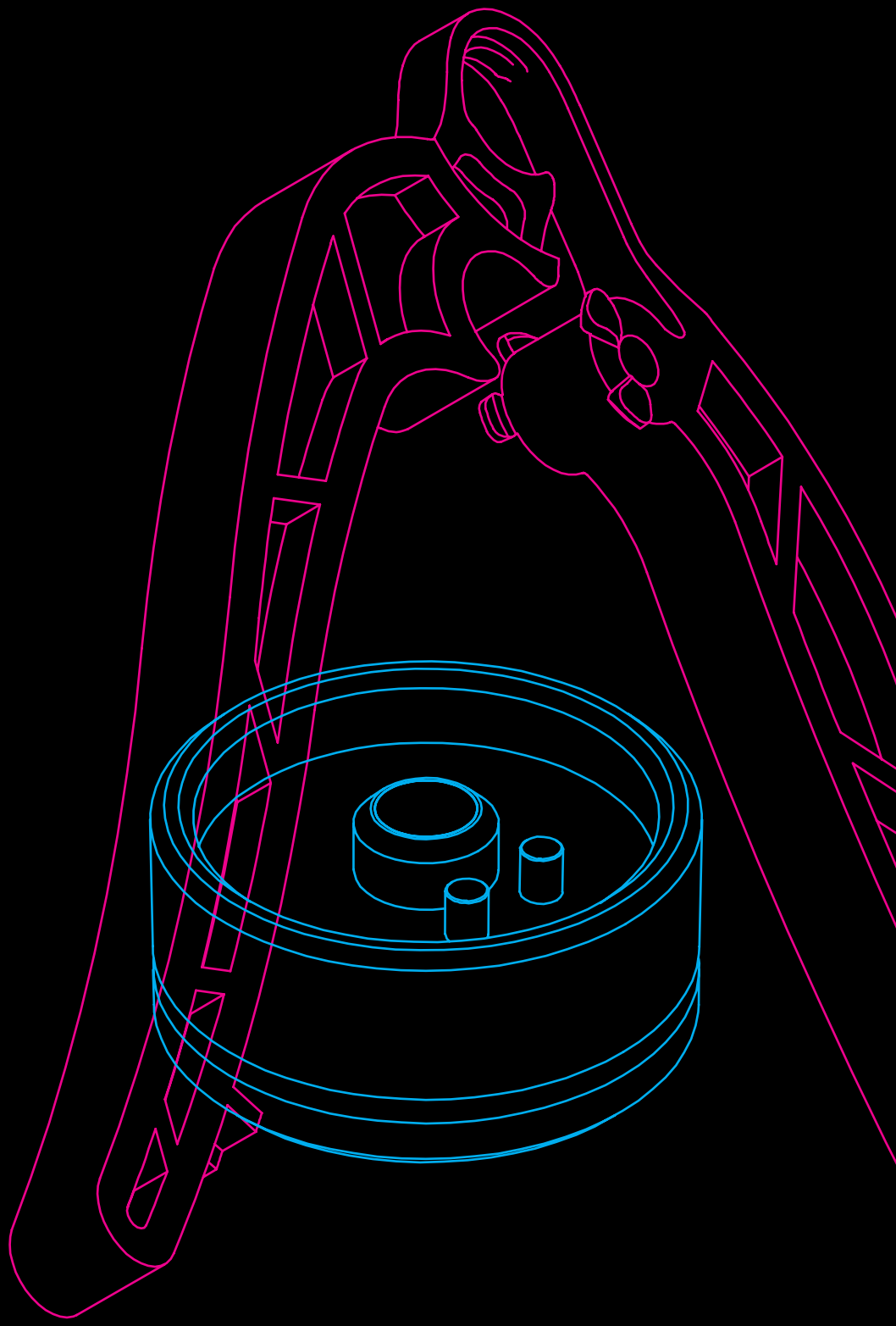

Tools

Tools

Fidlock fasteners are individually configurable and can therefore be optimally adjusted to suit the respective application and the desired design. According to the configuration of the fastener, Fidlock offers the appropriate tools to ensure it can be fitted easily. The Quickfinder clearly shows which tools can be used for fitting the different fasteners and fastener parts, and takes the user directly to the correct tool/catalog page with a single click.

		TOOL1	**TOOL2**	**TOOL3**	**TOOL4**	**TOOL5**	**TOOL6**
MINI TURN *thread*	male	Page 6		Page 7			
	female		Page 6	Page 7			
MINI TURN *rivet*	male						
	female						

		TOOL1	TOOL2	TOOL3	TOOL4	TOOL5	TOOL6
SNAP male S screw low	front				Page 14		
	back			Page 20		Page 14	
SNAP male S screw high	front				Page 14		
	back			Page 20		Page 14	
SNAP female S screw low	front						Page 15
	back			Page 20			
SNAP female S screw high	front						Page 15
	back			Page 20			
SNAP female S screw cap	front						Page 16
	back			Page 20			
SNAP male M screw low	front			Page 20			
	back			Page 20			
SNAP male M screw high	front			Page 20			
	back			Page 20			
SNAP female M screw	front						
	back	Page 6		Page 7			
SNAP male L screw low	front						
	back			Page 20			
SNAP male L screw high	front						
	back			Page 20			
SNAP male L screw cap	front						
	back			Page 20			
SNAP male S rope	front						
	back				Page 14		

TOOL 7	TOOL 8	TOOL 9	TOOL 10	TOOL 22	TOOL 23	TOOL 18
				Page 8		
				Page 8		

TOOL 7	TOOL 8	TOOL 9	TOOL 10	TOOL 22	TOOL 23	
					Page 21	
					Page 21	
					Page 21	
Page 15					Page 21	
					Page 21	
Page 15					Page 21	
					Page 21	
	Page 16					
		Page 17				
Page 17					Page 21	
		Page 17				
Page 17					Page 21	
				Page 8		
			Page 18			
Page 18					Page 21	
			Page 18			
Page 18					Page 21	
			Page 19			
	Page 19					
				Page 8		
						Page 21

Tools

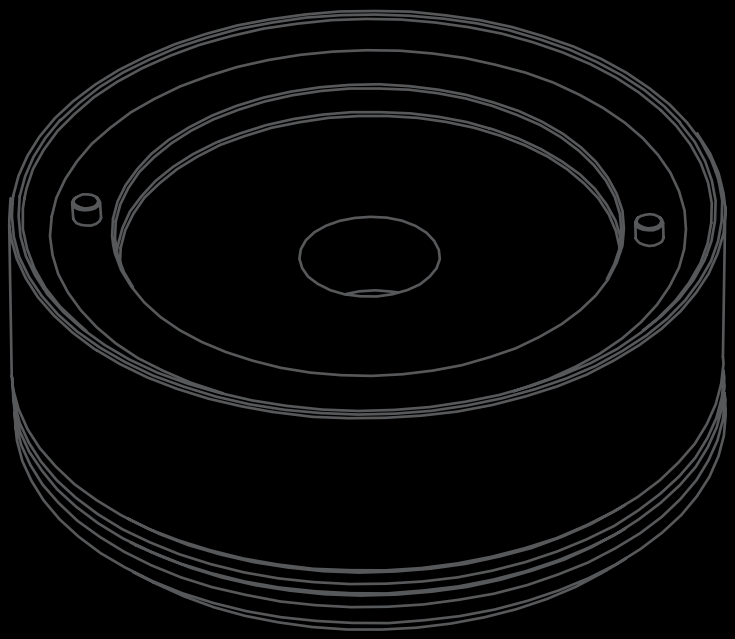

Tools for MINI TURN fasteners

MINI TURN fasteners are the ideal solution for most fastener concepts and applications. The fastener parts are fitted using sturdy tools. The fasteners consist of a male upper part (1) plus a handle and a female lower part (2), each comprising a front and back section. Product designers can choose between two different processing methods: the MINI TURN thread (screw connection) or the MINI TURN rivet (heat rivet) for high stresses and strains.

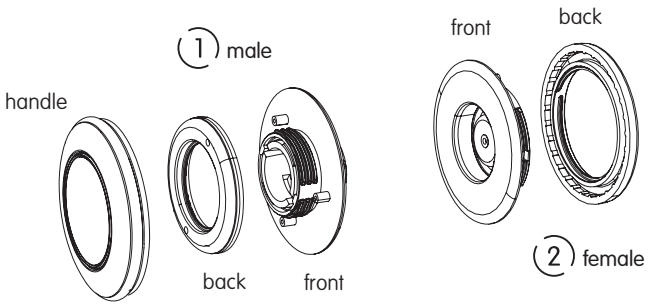

	Part	Tool	
MINI TURN *thread*	back (male)	TOOL1	Page 6
	back (female)	TOOL2	Page 6
	back (male / female)	TOOL3	Page 7
MINI TURN *rivet*	front / back		Page 11

Tools

TOOL 1

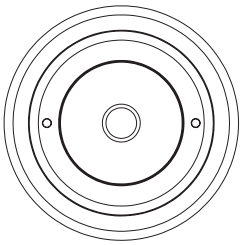

Technical data/ Details			
Material	Aluminium	Diameter	52.00 mm
Number of rings	1		
Used for			
male	MINI TURN thread		

Tool with two pins for screwing the fastener's threaded ring on by hand. An industrial drive can be connected to the thread on the back section for the purposes of machine processing.

TOOL 2

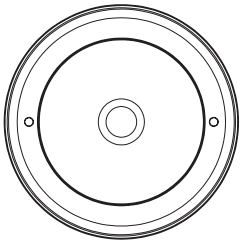

Technical data/ Details			
Material	Aluminium	Diameter	52.00 mm
Number of rings	2		
Used for			
female	MINI TURN thread		

Tool with two pins for screwing the fastener's threaded ring on by hand. An industrial drive can be connected to the thread on the back section for the purposes of machine processing.

Note: As an alternative to TOOL1 and TOOL2, TOOL3 can be used.

Fitting

The MINI TURN thread is fitted in two simple work steps using TOOL1 and TOOL2. First the male upper fastener part (1), consisting of a back and front section, is screwed on in a clockwise direction using TOOL1. The same work step is then carried out for the female lower fasten er part (2) using TOOL2. Finally, the handle is clipped onto the male part and aligned.

male

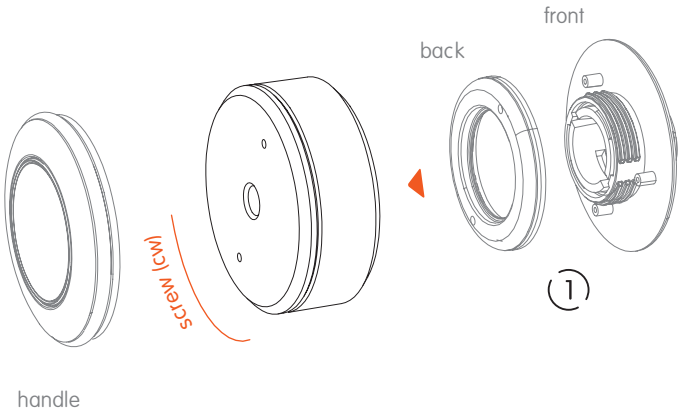

female

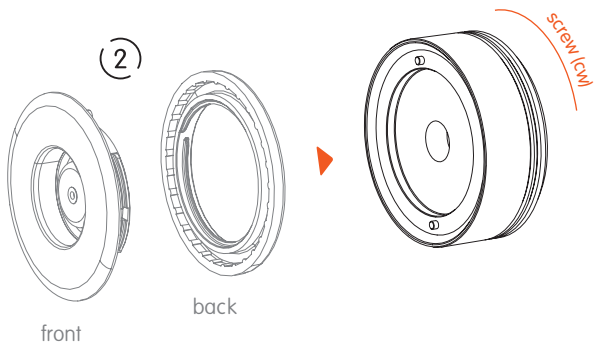

TOOL 3

Technical data/ Details	
Material	Burnished steel
Used for	
male	MINI TURN thread
female	MINI TURN thread

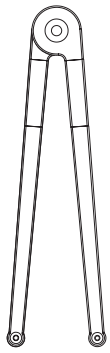

The adjustable face spanner is used for manually fitting both the male upper fastener parts and the female lower fastener parts of the MINI TURN thread. It is also perfect for fitting many SNAP fasteners.

Note: As an alternative to TOOL3, a combination of TOOL1 and TOOL2 can be used. We recommend using TOOL1 and TOOL2 for fitting the BIG TURN series. For fitting the MINI TURN series and samples for salespeople, we recommend using TOOL3.

Fitting

The MINI TURN thread can be fitted easily using a single tool (TOOL3). For the male upper fastener part (1), the back and front sections are placed onto TOOL3 (face spanner) and screwed into one another in a clockwise direction. The same work step is then carried out for the female lower fastener part (2). Finally, the handle is simply clipped onto the male part and aligned.

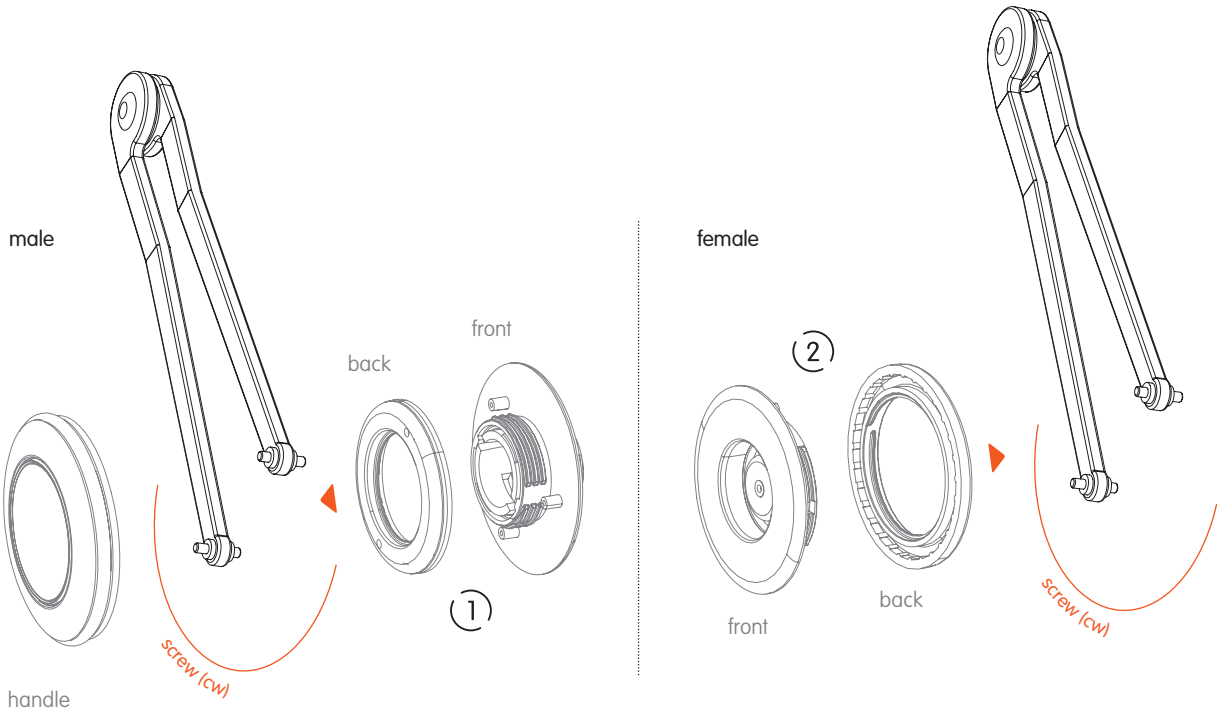

Diagram of an example fastener

Tools

TOOL 22

Technical data/ Details			
Material	PA66-GF	Diameter	54.00 mm

Used for	
male	MINI TURN thread

This TOOL is a comination of TOOL 1 and TOOL 2, meaning you need only one TOOL to assembly a Mini Turn Thread fastener. To make assembly easier, it is best to purchase two TOOLS.

Fitting

The MINI TURN thread is fitted in two simple steps using the same TOOL, TOOL 22. First the male upper fastener part (1), consisting of a back and fron section, is screw on in a clockwise direction. The same work step and TOOL is then used to fit the female lower fastener part (2). Finally the handle is clipped onto the male part and aligned. This TOOL ist not suitable for mass production, these are convient TOOLS to assemble samples.

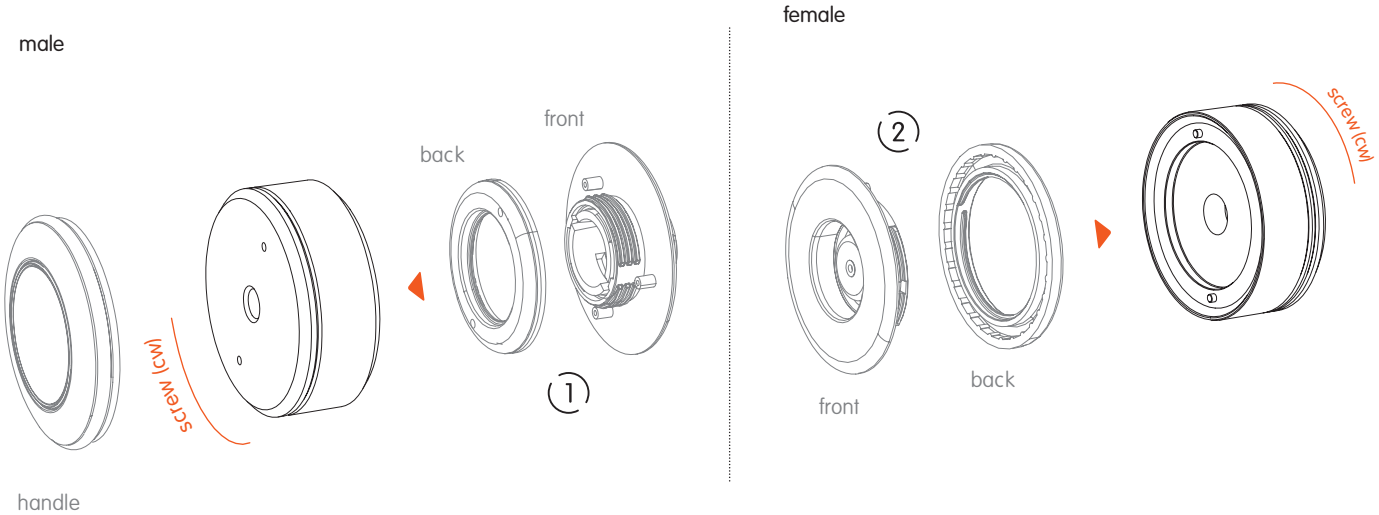

Fitting

Tools required

For fitting the fastener you will need scissors, cutters, punch pliers, a fiber-tip pen, and TOOL3 (face spanner).

Fitting the pattern/punching template (1:1)

Please download the pattern and punching template at the following link:
download.fidlock.com/Template_MINI_TURN_thread.zip
Print off the pattern and then cut it out.

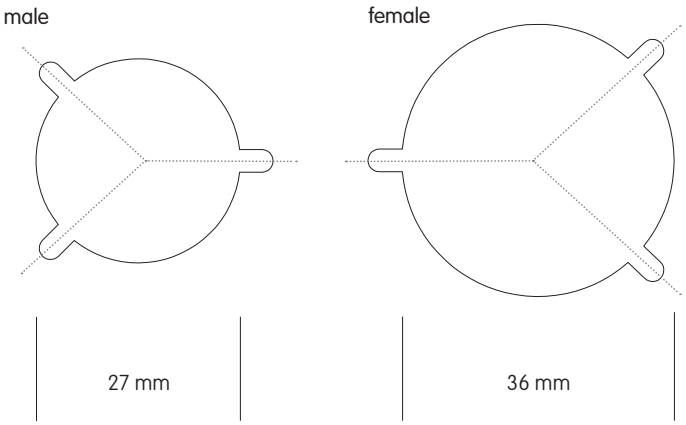

Material and material reinforcement

Note: The MINI TURN requires a material thickness of min. 1.5 to 2.5 mm.

If the bag material used is too floppy or too thin, cut out additional patterns for the female lower part and male upper part, e.g. out of card, leather, or polypropylene, and place these between the fastener parts as reinforcement. The thickness of these reinforcement materials should be 1 to 1.5 mm.

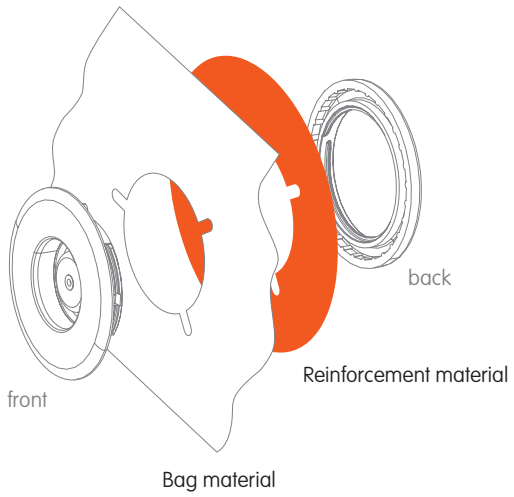

Positioning and aligning exactly

Cut out the patterns (1) and place the male pattern on the flap of the bag and the female pattern on the body of the bag. ***Note:*** It is essential to ensure the exact alignment of the lugs (2), so that the male and female closing mechanism works in the end!

Then use the fiber-tip pen to mark the position on the material (fabric) (3) and cut or punch the holes in the material (4).

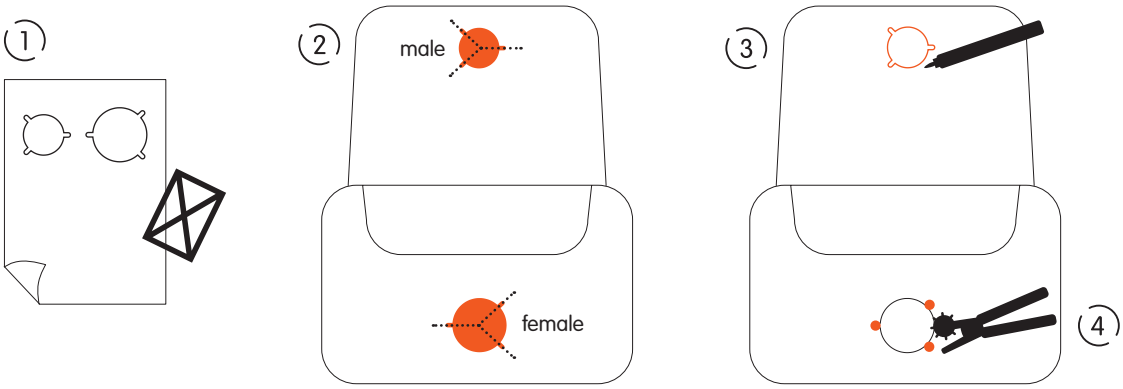

Fitting correctly

Fit the female lower fastener part (5) using TOOL3 (face spanner). Then screw the back and front sections on in opposite directions and tighten by hand (see page 6/7 for details). ***Note:*** The "Fidlock patented" logo will be correctly and horizontally aligned if the position of the lugs (2) was correctly punched.

Fit the male upper fastener part (6) using TOOL3 (face spanner). Fit the back and front sections against each other and tighten by hand.

Note: It is essential to ensure the exact alignment of the handle. To do so, turn the handle to the correct position (sticker/logo) and then click into place (7).

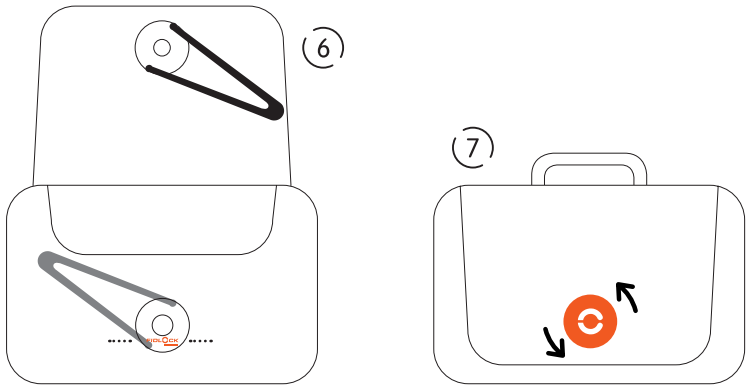

5

FIDLOCK® patented

Enlarged view

Note: With the MINI TURN rivet, which is designed for high stresses and strains, both the upper and lower fastener parts require a special device to fit the heat rivets that are integrated in the product. The fastener is therefore optimized for semi-automated fitting in large production lots. The fitting machine is available on request from Fidlock – simply contact our Service team directly by sending an e-mail to info@fidlock.com or calling +49 (0) 511 / 96159310.

Tools

Tools for SNAP fasteners

SNAP fasteners are the flexible solution for many fastener concepts and attachment solutions. The fastener parts are fitted using robust tools that are each used for both the upper part (1) and the lower part (2). The fasteners consist of a female upper part and a male lower part, each comprising a front and back section.

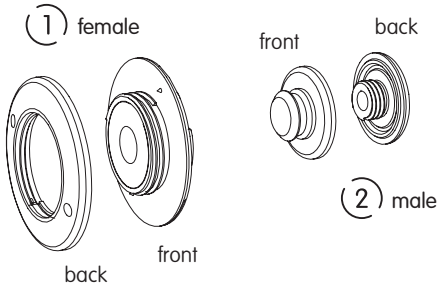

SNAP	Part	Tool	
SNAP male S screw low	front	TOOL4	Page 14
	back	TOOL5	Page 14
SNAP male S screw high	front	TOOL4	Page 14
	back	TOOL5	Page 14
SNAP female S screw low	front	TOOL6	Page 15
	back	TOOL7	Page 15
SNAP female S screw high	front	TOOL6	Page 15
	back	TOOL7	Page 15
SNAP female S screw cap	front	TOOL6	Page 16
	back	TOOL8	Page 16
SNAP male M screw low	front	TOOL9	Page 17
	back	TOOL7	Page 17
SNAP male M screw high	front	TOOL9	Page 17
	back	TOOL7	Page 17
SNAP female M screw	front		
	back	TOOL1	Page 6
SNAP male L screw low	front	TOOL10	Page 18
	back	TOOL7	Page 18
SNAP male L screw high	front	TOOL10	Page 18
	back	TOOL7	Page 18
SNAP male L screw cap	front	TOOL10	Page 19
	back	TOOL8	Page 19
SNAP female L screw	front		
	back	TOOL2	Page 6

Tools

TOOL 4

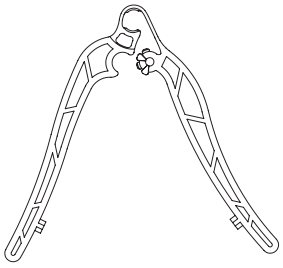

Technical data/Details	
Material	Nylon
Used for	
front	SNAP male S screw low, SNAP male S screw high

Plastic pliers for holding the SNAP male front section.

TOOL 5

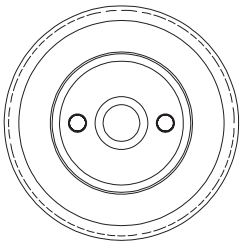

Technical data/Details			
Material	Aluminium	Diameter	32.00 mm
Number of rings	1		
Used for			
back	SNAP male S screw low, SNAP male S screw high		

Tool with two pins for screwing the fastener's threaded ring on by hand. An industrial drive can be connected to the thread on the back section for the purposes of machine processing.

Fitting

SNAP fasteners are fitted in two simple work steps using both TOOL4 and TOOL5. The front section of the male part (1) is inserted into TOOL4 (pliers). The back section is then screwed on in a clockwise direction using TOOL5.

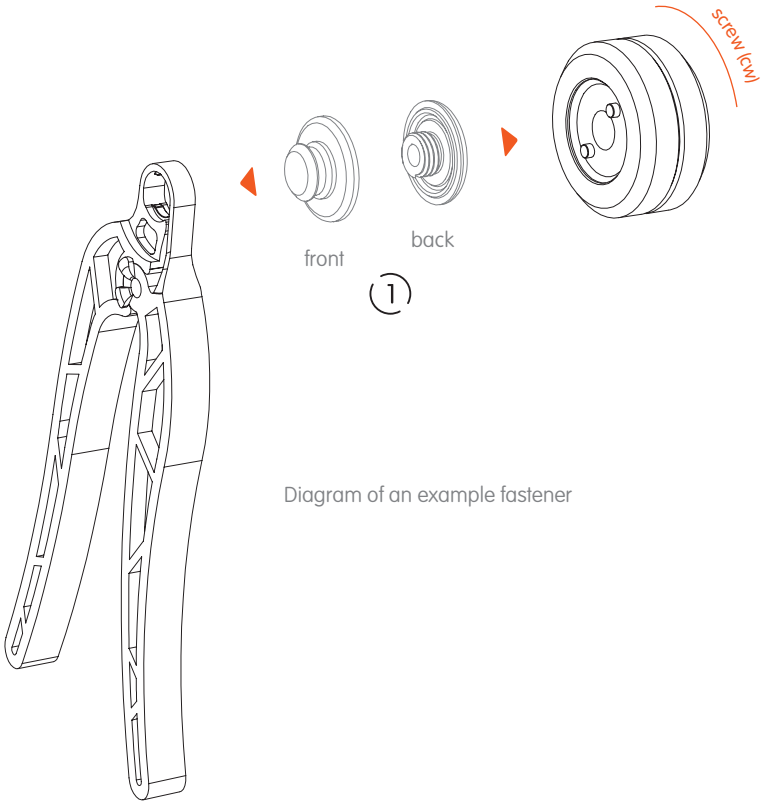

Diagram of an example fastener

TOOL 6

Technical data / Details			
Material	Aluminium	Diameter	52.00 mm
Number of rings	1		
Used for			
front	SNAP female S screw low, SNAP female S screw high, SNAP female S screw cap		

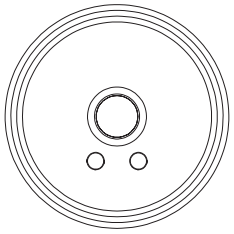

Laser-sintered tool for holding the SNAP female screw. Parts can be screwed manually or using a 3/8" square spanner (ratchet).

TOOL 7

Technical data / Details			
Material	Aluminium	Diameter	40.00 mm
Number of rings	2		
Used for			
back	SNAP female S screw low, SNAP female S screw high, SNAP male M screw low, SNAP male M screw high, SNAP male L screw low, SNAP male L screw high		

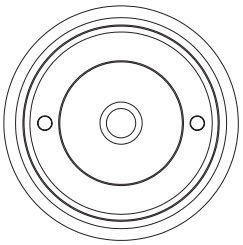

Tool with two pins for screwing the fastener's threaded ring on by hand. An industrial drive can be connected to the thread on the back section for the purposes of machine processing.

Fitting

TOOL6 and TOOL7 are suitable for fitting many SNAP fasteners and can be used for both male and female parts. The back section is inserted into TOOL7, then screwed onto the front section in a clockwise direction using TOOL6.

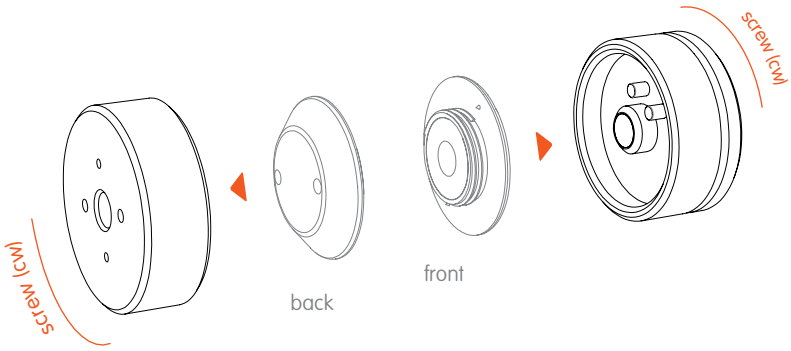

Diagram of an example fastener

Tools

TOOL 6

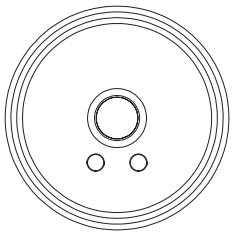

Technical data / Details			
Material	Aluminium	Diameter	52.00 mm
Number of rings	1		
Used for			
front	SNAP female S screw low, SNAP female S screw high, SNAP female S screw cap		

Laser-sintered tool for holding the SNAP female screw. Parts can be screwed manually or using a 3/8" square spanner (ratchet).

TOOL 8

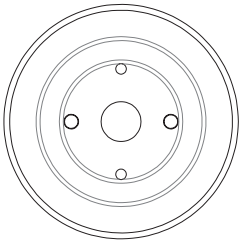

Technical data / Details			
Material	Aluminium	Diameter	40.00 mm
Number of rings	no ring		
Used for			
back	SNAP female S screw cap, SNAP male L screw cap		

Tool with two pins for screwing the fastener's threaded ring on by hand. An industrial drive can be connected to the thread on the back section for the purposes of machine processing.

Fitting

TOOL6 and TOOL8 used together enable SNAP fasteners to be fitted effortlessly and can be used for both male and female parts. For this, the back section is inserted into TOOL8, then screwed onto the front section and TOOL6 in a clockwise direction.

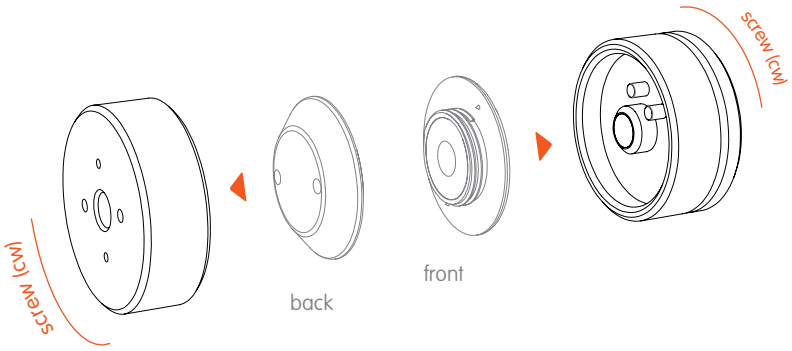

Diagram of an example fastener

TOOL 9

Technical data / Details	
Material	Nylon
Used for	
front	SNAP male M screw low, SNAP male M screw high

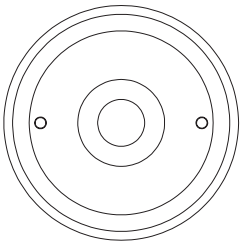

Tool with two pins for screwing the fastener's threaded ring on by hand. An industrial drive can be connected to the thread on the back section for the purposes of machine processing.

TOOL 7

Technical data / Details			
Material	Aluminium	Diameter	40.00 mm
Number of rings	2		
Used for			
back	SNAP female S screw low, SNAP female S screw high, SNAP male M screw low, SNAP male M screw high, SNAP male L screw low, SNAP male L screw high		

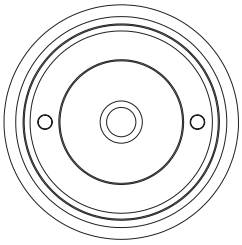

Tool with two pins for screwing the fastener's threaded ring on by hand. An industrial drive can be connected to the thread on the back section for the purposes of machine processing.

Fitting

TOOL9 and TOOL7 allow easy fitting of many SNAP fasteners and can be used for both male and female parts. In each case, the front section is inserted into TOOL9, then screwed onto the back section and TOOL7 in a clockwise direction.

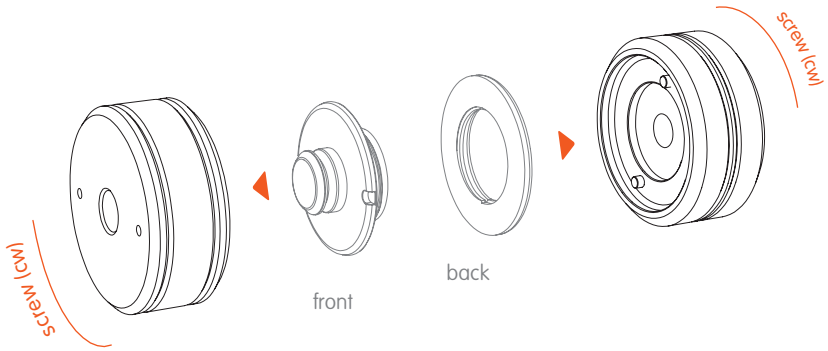

Diagram of an example fastener

Tools

TOOL 10

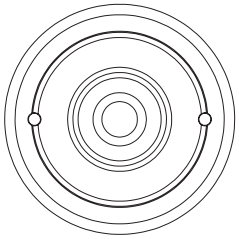

Technical data / Details			
Material	Aluminium	Diameter	44.00 mm
Number of rings	3		
Used for			
front	SNAP male L screw low, SNAP male L screw high, SNAP male L screw cap		

Tool with two pins for screwing the male part (upper fastener part) on by hand.
An industrial drive can be connected to the thread on the back section.

TOOL 7

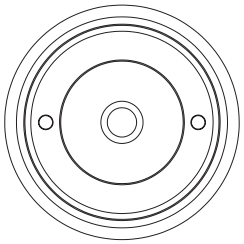

Technical data / Details			
Material	Aluminium	Diameter	40.00 mm
Number of rings	2		
Used for			
back	SNAP female S screw low, SNAP female S screw high, SNAP male M screw low, SNAP male M screw high, SNAP male L screw low, SNAP male L screw high		

Tool with two pins for screwing the fastener's threaded ring on by hand. An industrial drive can be connected to the thread on the back section for the purposes of machine processing.

Fitting

TOOL10 and TOOL7 enable easy fitting of many SNAP fasteners and can be used for both male and female parts. In each case, the front section is inserted into TOOL10, then screwed onto the back section and TOOL7 in a clockwise direction.

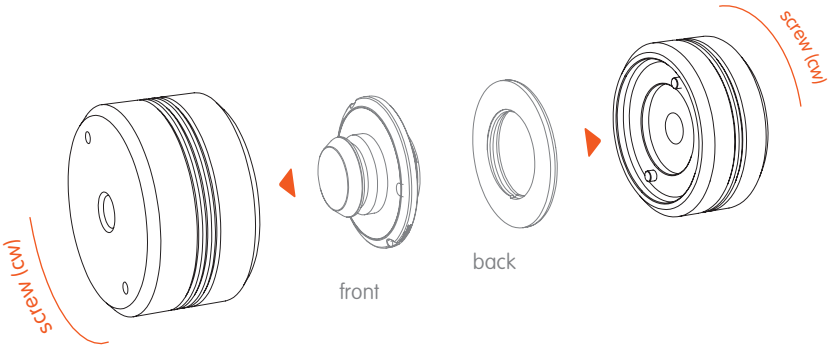

Diagram of an example fastener

TOOL 10

Technical data / Details

Material	Aluminium	Diameter	44.00 mm
Number of rings	3		

Used for

front	SNAP male L screw low, SNAP male L screw high, SNAP male L screw cap

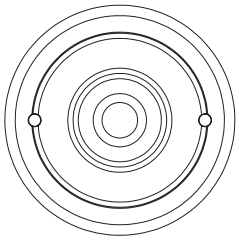

Tool with two pins for screwing the male part (upper fastener part) on by hand.
An industrial drive can be connected to the thread on the back section.

TOOL 8

Technical data / Details

Material	Aluminium	Diameter	40.00 mm
Number of rings	no ring		

Used for

back	SNAP female S screw cap, SNAP male L screw cap

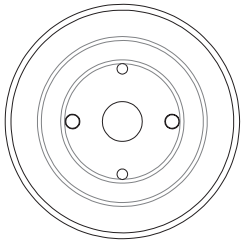

Tool with two pins for screwing the fastener's threaded ring on by hand. An industrial drive can be connected to the thread on the back section for the purposes of machine processing.

Fitting

TOOL10 and TOOL8 allow easy fitting of many SNAP fasteners and can be used for both male and female parts. In each case, the front section is inserted into TOOL10, then screwed onto the back section and TOOL8 in a clockwise direction.

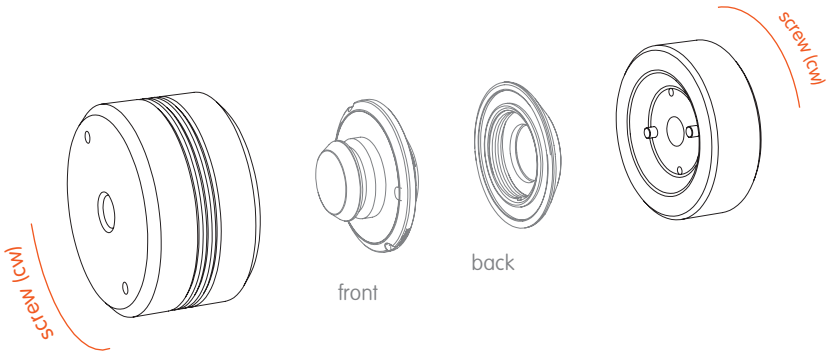

Diagram of an example fastener

Tools

TOOL 3

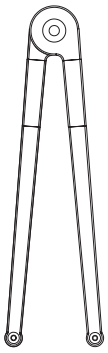

Technical data / Details	
Material	Burnished steel
Used for	
back	SNAP male S screw low, SNAP male S screw high, SNAP female S screw low, SNAP female S screw high, SNAP female S screw cap, SNAP male M screw low, SNAP male M screw high, SNAP male L screw low, SNAP male L screw high, SNAP male L screw cap

The adjustable face spanner is used for manually fitting both the male upper fastener parts and the female lower fastener parts of SNAP fasteners. It is also perfect for fitting MINI TURN fasteners.

Fitting

TOOL3 allows easy fitting of SNAP fasteners using a single tool and can be used for both male and female parts. For this, the back section is inserted into TOOL3, then screwed onto the front section and the appropriate counterpart in a clockwise direction.

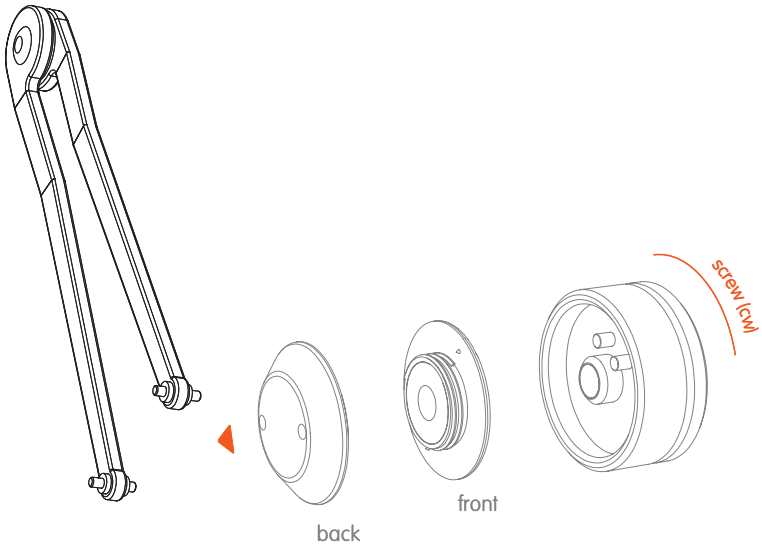

Diagram of an example fastener

Tool 23

Technical data / Details	
Material	PA66-GF
Used for	
back	SNAP male S screw low back, SNAP male S screw high back, SNAP female S screw low front, SNAP female S screw low back, SNAP female S screw screw high front, SNAP female S screw high back, SNAP male M screw low/ high back, SNAP male L screw low back

Fitting

Tool 23 is a combination of TOOL 5, TOOL 6 and TOOL 7. This TOOL can be used for all the SNAP male and female S fasteners as well as the male M and L fasteners. It is ideal when using the male and female SNAP fasteners that you purchase two of these TOOLS for easier assembly. Simply place the female/male part of the fastener into the TOOL and twist clockwise to tighten.
Tip: By holding the other part of the fastener with a piece or leather or non slipperly fabric to assembly goes faster and is easier on your hands. This TOOL is not suitable for mass production. It is a convinient TOOL for assembling samples.

Tool 18

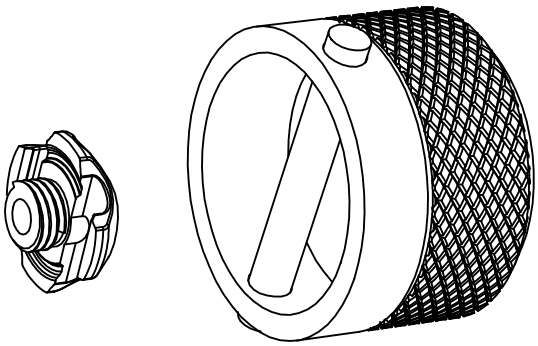

Technical Data	
Material	Aluminium
Used for	
back	SNAP male S rope

Fitting

TOOL 18 can be used to tighten and/or properly attached the upper part of the SNAP male S rope to its counter part. Simply place the upper part of the SNAP male S rope onto the TOOL and turn clockwise to tighten.

Disclaimer

The manufacturer of the end products in which FIDLOCK fasteners are used bears responsibility for thoroughly testing that the FIDLOCK products are suitable for the intended application. FIDLOCK assumes no responsibility for damage caused by misuse, modification, repair and adequacy specifi- cations or specified ultimate loads. All ultimate load specifications in sales catalogues are voluntary, non-binding specifications and cannot replace the test conducted by the end product manufacturer in which the manufacturer tests the adequacy of the FIDLOCK products for the intended application.

Patents

The Fidlock product families BIG TURN, MINI TURN, SNAP, SNAP BUCKLE, SNAP HELMET BUCKLE, SNAP FLAT BUCKLE, SNAP PUSH, SNAP PULL, SLIDER make use of technology as described in patent application of patent family WO002008006357 (EP000002040572, US020100283269, RU000002415623, AU002007272165, CN000101657120, CN000101646362, KR102009033469, CA000002681141).
The product families MINI TURN und BIG TURN are protected by patent DE 102004015873 and further patents and patent applications which belong to this patent family. Furthermore all products are covered by additional patent applications in numerous countries.
The product family HOOK makes use of technology as described in patent application PCT/EP 2013/060762.

Fidlock® is a registered trademark. Mistakes, misprints and technical changes reserved.
Colours may deviate from the originals due to the printing process.